ECO2SMALL PLUS

USER INSTRUCTIONS

READ CAREFULLY AND KEEP WITH THE PACK
(translation of the original instructions)

Doc. n° UM000xxx
Rev. "B" - 16/01/25

SECTION 1: QUICK REFERENCE INSTRUCTION

INSTALLATION

Doc. n° UM000xxx
Rev. "B" - 16/01/25

Modello - Modèle - Model Modell	**ECO2SMALL PLUS**	Epta TECHNICA
Fabbricante - Constructeur - Manufacturer Hersteller	**Epta Spa -** Via Mecenate, 86 - 20138 Milano (MI) ITALIA Tel. 02/55403211 Telefax 02/55401023	

Quick reference instruction

IT FR EN DE

CONTENT

1. Equipment required **3**

2. Handling **4**

3. Installation **6**

3.1 Positioning and installation 6

3.2 Electric connections 9

3.3 Refrigeration connection 10

3.4 System start-up. 18

SYMBOLS USED

Prohibition symbol: it prohibits the carrying out of specific operations.

Attention symbol: accident prevention rules for the operator.

Warning symbol: possibility exists of causing damage to the refrigeration pack and/or its components.

Note symbol: it provides useful information.

Personal protection equipment

	Safety shoes
	Protective gloves
	Safety glasses
	Safety helmet
	Safety vests

1. EQUIPMENT REQUIRED

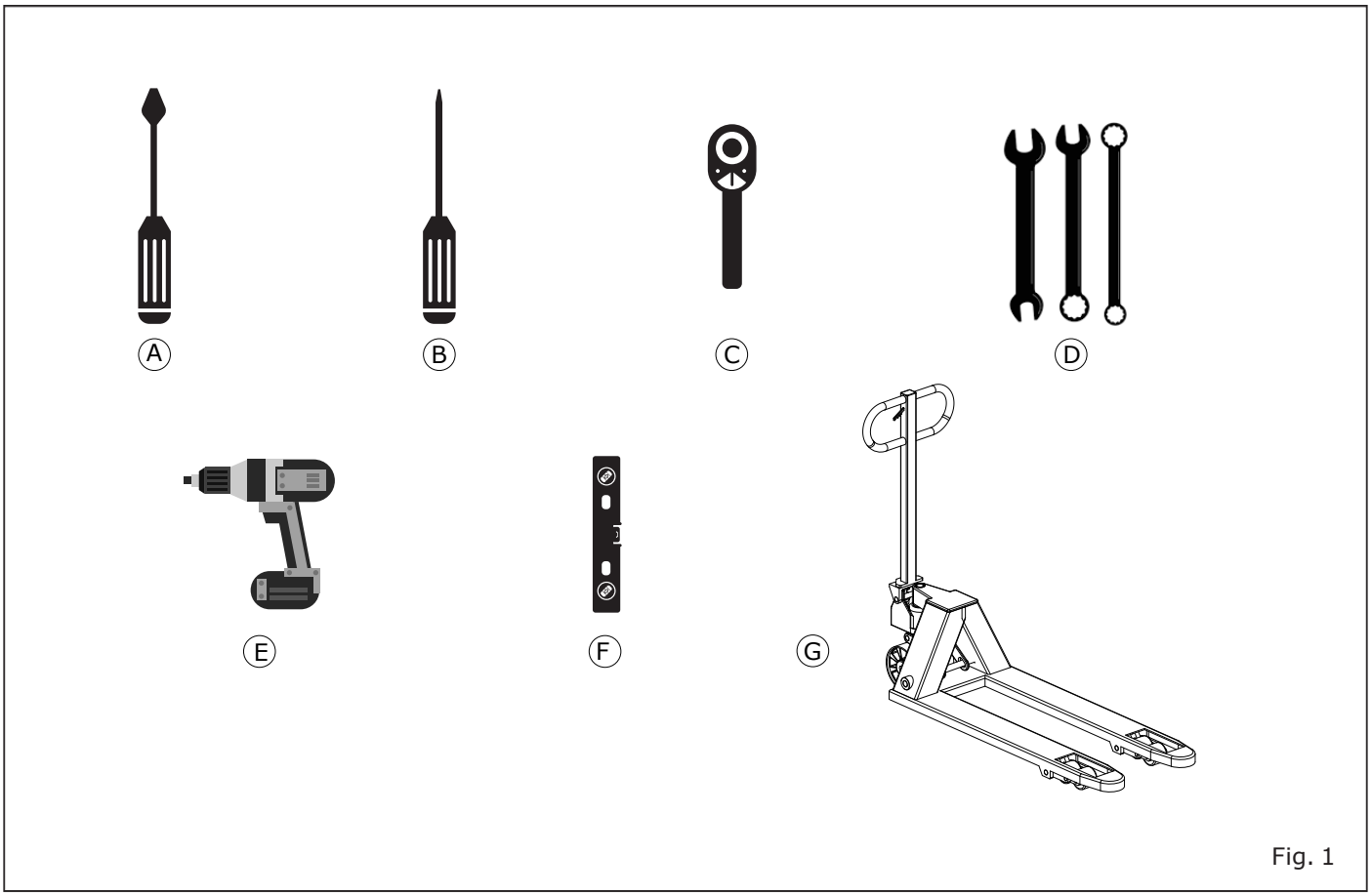

Fig. 1

A. Flat screwdriver
B. Star screwdriver
C. Ratchet wrench
D. Set of spanners
E. Electric screwdriver
F. Spirit level
G. Pallet truck

2. HANDLING

Before carrying out the operations to remove the packaging and transport, wear personal protective clothing and use means and tools suitable for the dimensions and weight of the appliance.

The refrigeration pack is contained in a specific wrapping with handling chutes or pallets, according to the handling needs, and pressure-loaded with nitrogen.

Before starting the liftng operations, check that the refrigeration pack is balanced, stable and pressure-relieved

For the transportation and handling of the refrigeration pack use:

- A lift truck suited to lifting the referigeration pack with suitable characteristics compliant with the regulations in force ("Fig. 2")

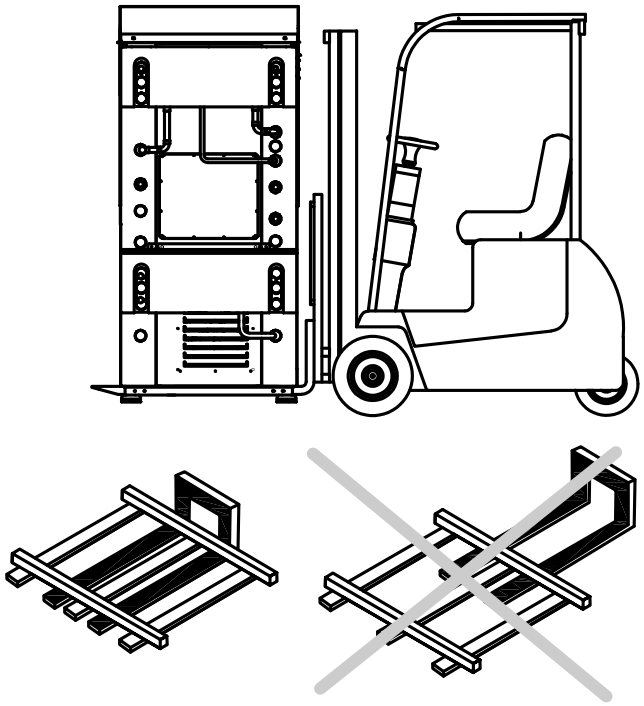

Fig. 2

Before starting the lifting operations, check that the chutes are firmly attached to the base of the refrigeration pack.

- A crane suited to lifting the refrigeration pack, with suitable characteristics compliant with the regulations in force ("Fig. 3")

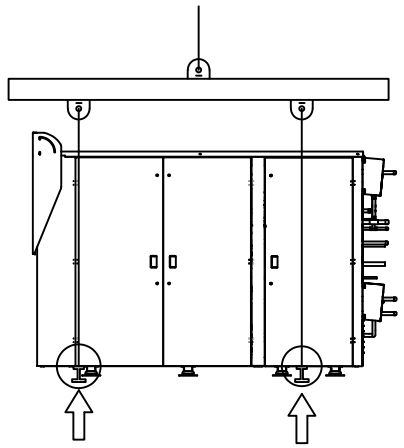

Fig. 3

Position the lifting bars at the points marked on the frame, using spacers which protect the refrigeration pack from damage to its structure.

Before moving the refrigerated pack, lift it enough to remove the chutes and complete the lifting.

Use a lifing beam to avoid damaging the electric panel, frame and enclosure (if present).

Do not make sudden movements or impacts that could compromise the integrity and functionality of the components of the refrigeration unit.

3. INSTALLATION

3.1 Positioning and installation

The pack is delivered under pressure with nitrogen. Discharge the pressure before starting the installation phases.

For a correct operation of the refrigeration pack, check that it is positioned:

- On a level floor.
- Far from heat sources and risks of fire

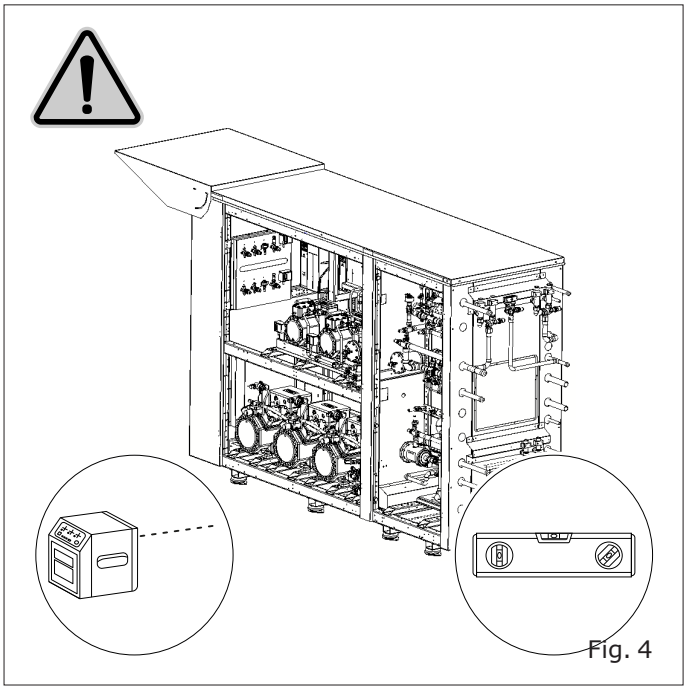

Fig. 4

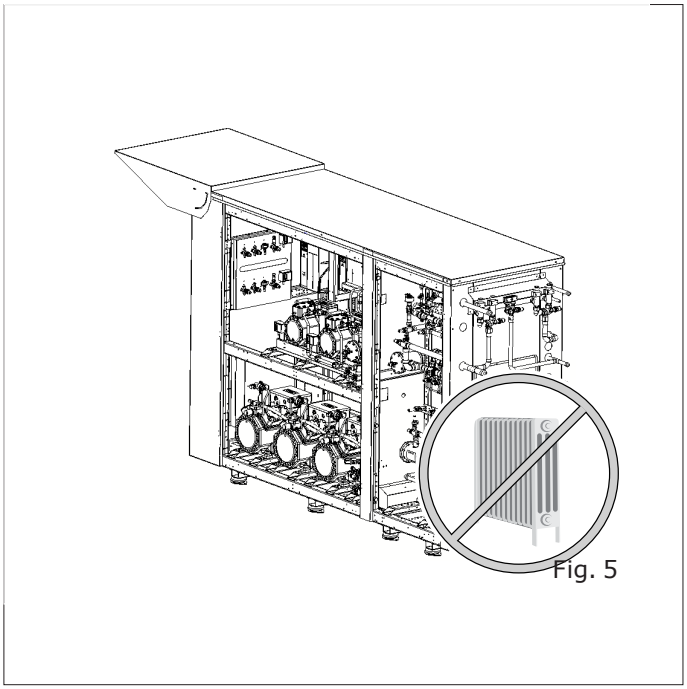

Fig. 5

Choose the place of installation of the refrigeration plant to avoid, at any time, the condensation of humidity present in the air.

Respect the functional spaces required for proper operation and maintenance

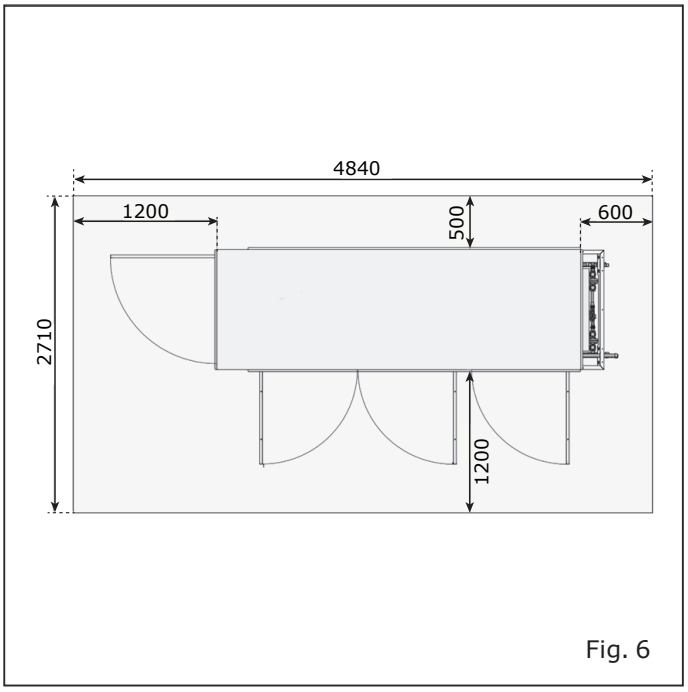

Fig. 6

Functional space for maintenance work

Having positioned it definitively, it is necessary to rigidly secure the refrigeration pack to the base using the fixing holes on the anti-vibration plinths.

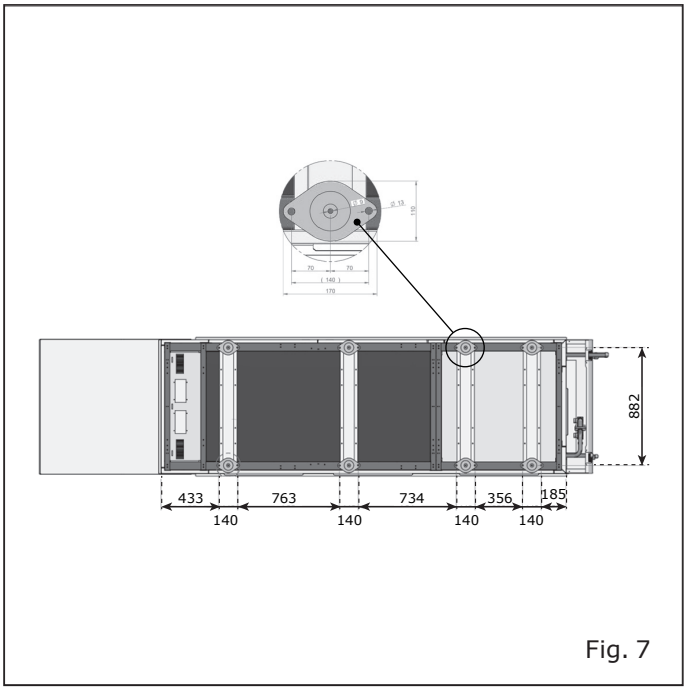

Fig. 7

INSTALLATION IN TECHNICAL ROOM

For installation in the technical room or machine room, dedicated openings on the perimeter walls or aeraulic devices must guarantee an airflow, to comply with the regulations in force, to avoid hazardous concentrations of refrigerant.
In particular:

- free passage of air from windows, grilles and air inlets or ducts must not be prevented by walls or barriers
- the ventilation hole must not vent towards openings of other rooms
- attention must be paid to density of refrigerant
- it must be possible to operate the fans from the outside and from the inside
- in the case of machine rooms installed below ground, the control switch from the outside of the special machine room must be positioned on the ground floor

If installed in a technical room, provide a detector for R744 concentration in the atmomsphere to provide alarm signal or the operation of appropriate air exchange systems.

The alarm of the R744 concentration detector must be positioned outside the technical room to prevent the entry of authorized personnel inside the room if the alarm is still on.

INSTALLATION OUTDOORS

For outdoor installation, the final location of the refrigeration pack must consider the need to:

- minimize the acoustic pollution produced (positioning the refrigeration pack as far as possible from populated areas and avoiding the possible sources of sound wave reflection)
- position the refrigeration pack away from flammable materials minimizing the risk of fire
- position the refrigeration pack away from sources of heat minimising the possibility of refrigerant discharge in the environment

3.2 Electric connections

The electric panel of the refrigeration pack is designed for 380V-400V/3ph/50Hz power supplies.
To earth the refrigeration pack a connection point is provided formed by a screw with nut and a mark with ground symbol, as the equipotentiality of the metal structure is guaranteed with a special assembly system.
It must be powered with cable of adequate cross-section for the power of the unit and according to the installation site conditions.

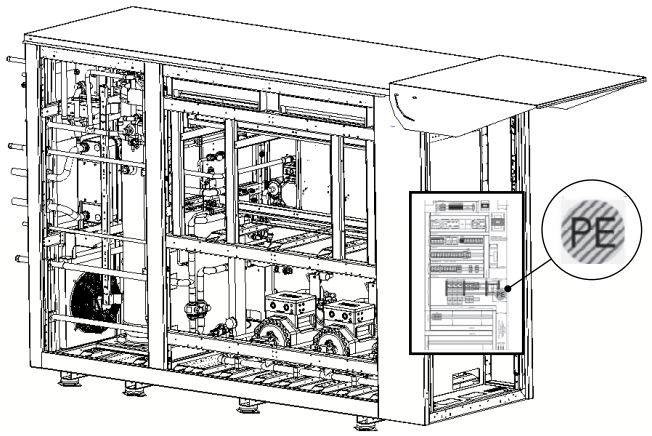

Fig. 8

It is necessary and essential to connect the refrigeration pack to the earthing system of the building.

The electric installation of the refrigeration pack must be carried out in accordance with existing regulations in force in the specific Country.

It is also necessary to verify:

- tightness to the terminal block of those electric cables which have no spring-loaded terminals (e.g. the motor power cables connected to the contactor), because during transport and handling the vibrations could have caused them to come loose
- the cabling of the electric panel, ensuring that the connection sleeves are not in contact with the pipes of the refrigerant or against the compressor and that in no way wear can occur following friction or contact with high temperature surfaces or the formation of condensation

ENTRY POINT OF POWER CABLES TO ELECTRIC PANEL

The entry point of the power cables must occur from the bottom using the plate positioned on the bottom of the electric panel (the plate is on the right and it is accessed by opening the electric panel). To maintain the protection level of the electric panel dedicated cable glands must be used.

During drilling for cable passage, prevent metal shavings entering the electric panel: DANGER OF SHORT CIRCUIT

All the components of the refrigeration pack must be protected from the possible penetration of water. Comply with the IP rating of the electric components in areas where water is in the immediate vicinity.

3.3 Refrigeration connection

The refrigeration pack is shipped and delivered complete with a charge of pressurised dry air in the refrigeration circuit

Upon request, it can also be provided with a set of filter elements (cartridges)

The connection pipes to the system are positioned at the side of the refrigeration pack ("Fig. 9" and "Fig. 10").
The delivery pipe to the gas cooler is **closed with a coloured cap** or a cover; all connection taps to the outside are closed.

Before connecting the refrigeration pack to the system:

- open the taps and vent the pressurized air
- remove the covers

The pipes to use, suitable to the safety pressure of the line, must be in:

- AISI 304L
- CuFe K6
- Cu R220

The refrigeration connections for systems that use R744 require careful observance of several warnings.

Brazing must be carried out in a nitrogen gas atmosphere to avoid the formation of harmful residues for the system

Use nitrogen gas for refrigeration marked by the letter "R"

Connect one end of the pipe to weld to the nitrogen can using a pressure reducing valve

As a practical indication for the correct regulation of the pressure, bear in mind that the flow of nitrogen must be barely perceived by the palm of the hand.

Subsequently for brazing, follow the usual procedure:

- connect (if provided for) the interception taps to the supply and return lines from the gas cooler, on the liquid line and on the suction lines
- provide a pressure outlet (by means of a tap) on the suction section and another on the liquid line to carry out the vacuum operation and leak test
- complete the insulation of the suction and liquid lines with adequate thickness.

For the correct connection refer to the following documents:

- Equipment's technical literature (if supplied with the power pack)

During normal operation of the power pack, the level of oil must be visible from the sight glass of the regulator placed on the side of each compressor.

If there is no filter before the transcritical valve (HPV), install one with a filtering grade as indicated in the valve documentation.

To check there are no leaks, pressure testing of the refrigeraton connections at a pressure equal to p_s-10% is required

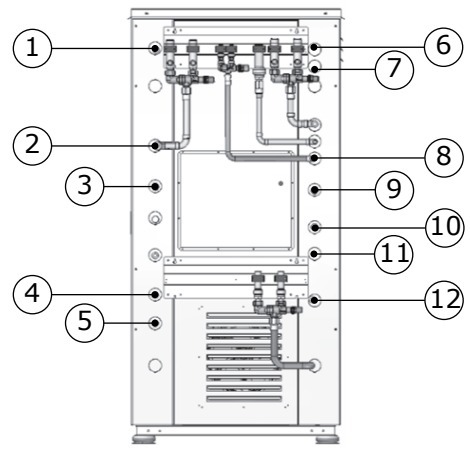

Fig. 9

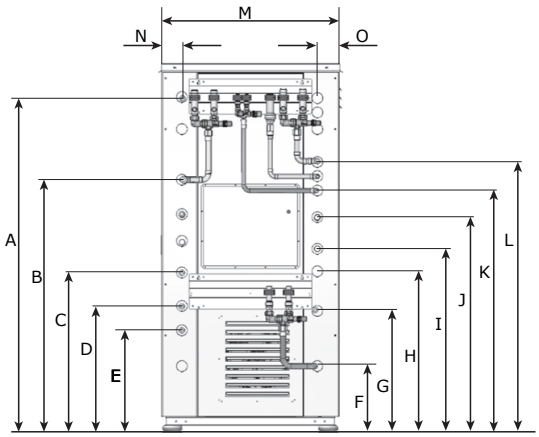

Fig. 10

1. Return inlet from gas cooler (1'' 1/8 K65)
2. Suction inlet from MEDIUM TEMPERATURE utility(1'' 3/8 K65 / 1'' 1/8 K65)
3. Flash gas towards FTE (1'' 1/8 K65)
4. Gas cooler outlet with heat recovery (1'' 1/8 K65)
5. Liquid line outlet (1'' 1/8 K65 / 7/8'' K65)
6. Suction line outlet under subcooler R134a (22mm Cu)
7. Liquid line inlet under subcooler |0 (16mm Cu)
8. Suction line inlet line from LOW TEMPERATURE utility(22x1,5mm Cu / 7/8'' K65)
9. Outlet H_20 (35mm Cu)
10. Inlet H_20 (35mm Cu)
11. Towards by-pass of the air desuperheater in the discharge line of the compressors LOW TEMPERATURE utility (5/8'' K65)
12. Gas cooler outlet without heat recovery (1'' 1/8 K65)

A. 1898mm
B. 1430mm
C. 1236mm
D. 716mm
E. 578mm
F. 375mm
G. 687mm
H. 912mm
I. 1039mm
J. 1218mm
K. 1369mm
L. 1531mm
M. 1000mm
N. 113mm
O. 121mm

INSTRUCTIONS FOR SYSTEMS WHICH USE R744 REFRIGERANT AND POE OIL

⚠ Use only POE BSE85K oil.

The Polyol Ester oil (POE) has the disadvantage of being particularly sensitive to ambient moisture (strong hygroscopicity). This requires the observance of several rules of use to prevent causing harm to the functional characteristics:

- it is necessary that all the oil containers remain hermetically closed until the oil must be introduced into the compressor
- avoid leaving the interior of the compressors and other parts of the refrigeration circuit in communication with the outside, also during system maintenance.
- do not pour remains of lubricant into moisture-permeable containers (e.g. plastic containers) but store them in original metal tins.
- store and dispose of oil according to the regulations in force in the countries of use

SAFETY VALVES

The safety valves are devices which drain the pressure designed to prevent excess accumulation of internal pressure in the fluids.
The safety valve works exclusively on the energy of the fluid, closing itself once normal pressure conditions have been restored.
These valves are designed to release a controlled volume of fluid from inside a system when it reaches a maximum pre-determined pressure, safely reducing the excess pressure.

The presence of pressurised elements, potentially subject to increased pressure, requires appropriate safety valves which ensure drainage of refrigerant.
if placed outdoors, the safety valves must be suitably protected against dirt and atmospheric agents.

The safety valves outlet must be placed in such a way that:

- it is not subject to clogging
- it does not create danger to people or damage to property during refrigerant outflow

The system uses safety valves to carry out two different types of control of the overpressure:

General safety
These valves are installed:

- as a pair, connected by a single pipe, on the liquid receiver and on the high pressure and suction lines
- single, connected by a single pipe, on the suction line of the ETE module (optional)

They are positioned:

- on the short side of the refrigeration pack, opposite the electric panel
- already connected to the pipes

The safety valves can be supplied separately from the refrigeration pack (optional) and subsequently connected on site

A 2-way changeover valve or tamper-proof tap is mounted between the pipe and the valve pair (both high and low pressure side), so that the system is always protected by one of the valves, even during maintenance of the other.
The switching valve does not allow intermediate positions such to completely exclude the pair of safety valves.

The general safety valves should be verified and replaced if necessary, according to the regulations in force in the country of use

The general safety valves, if provided with the refrigeration pack but seperated from it, must be assembled on site and possibly oustide the machine room.

In case there are **remote** general safety valves, check there are no leaks between the connection pipes.

In case there are **remote** general safety valves, check there are no leaks between the connection pipes, pay attention to connecting them as indicated in the reference diagram.

Pay attention to adequately fix the pipes.

For a suitable size of safety valve pipes you need to contact your back office in the reference.

Service safety

This valve is an **optional accessory** and has the function of ensuring safety against overpressure which could be created in the sectioned part of the system due to wrong maintenance which traps some of the refrigerant:

- if the valve has not been provided for and installed, the authorized technician must connect a safety accessory or pressure gauge to one of the two pressure outlets provided for the evacuation to monitor the pressure (to verify that the refrigerant has been correctly evacuated)
- if the valve has been mounted, it is usually installed on the corner tap pressure outlet. When the latter is open, the pressure outlet is isolated from the rest of the circuit; when the corner tap is closed to intercept the flow, the pressure outlet (and hence the service safety valve) is put in communication with the refrigerant.

The service safety valve is installed close to the circuit to be excluded and, considering the reduced presence of carbon dioxide in the section involved, it can discharge into an internal environment.

During operation, at the points in which the safety valves are installed, the corner tap must be open.

Both types of installation (general safety and service), must discharge with free outflow. This is necessary to avoid that the possible formation of dry ice (due to the refrigerant in liquid phase which drains at the atmospheric pressure, lower at the triple point of 5,18bar) clogs the valve vent.
For the same reason pressure-relief valves cannot be installed in the system on the refrigerant side (on the liquid part) as in this case the possible formation of dry ice could also clog the valve shutter.

For service connections, it is recommended to use manual valves and/or taps.

ASSEMBLY NOTES FOR REMOTE SAFETY VALVES

The safety valve must always be installed vertically with the main axis vertical.

It is forbidden to isolate the valve assembly.

The evacuation must be directed to a safe place, to avoid risking injury to personnel or damage to equipment in the event of valve activation.

The pipes must be adequately supported to avoid stresses that could lead to breakage during venting of the valve.

The safety valve outlets must remain free.

Pay attention to the sealing of the NPT threads, using materials compatible with the pressures and refrigerant fluids of the circuit.

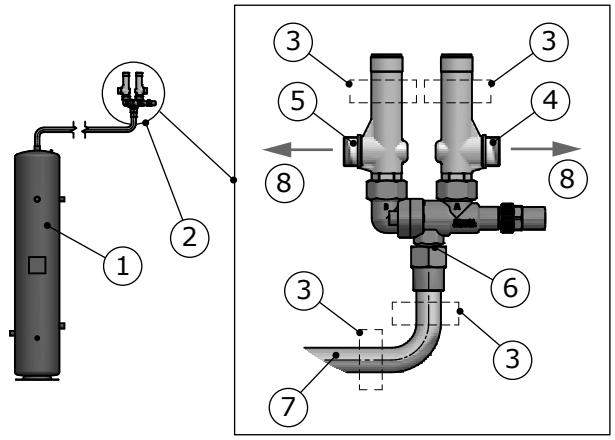

Fig. 11

1. Element to be protected (liquid receiver, suction line, ...)
2. Remote installation outdoors
3. Fixing the pipe (see notes)
4. Safety valve A
5. Safety valve B
6. ODS/NPT fitting
7. Inlet pipe
8. Discharge

ASSEMBLY OF SOLID FILTER

- loosen and remove the bolts of the filter housing, the lid and O-ring seal
- screw **A3** metal sleeve onto **A2** plastic cover
- position the filter element on **A3** metal sleeve
- screw **A3** metal sleeve on the thread around the hole at the bottom of the filter housing
- position **A1** spring on **A2** plastic cover
- reposition the O-ring seal in its housing
- reposition the lid and close it using the bolts

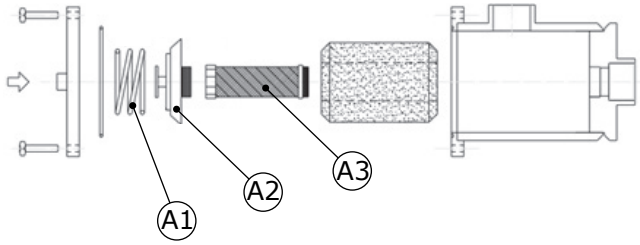

Fig. 12

ASSEMBLY OF MECHANICAL FILTER

- loosen and remove the bolts of the filter housing, the lid and O-ring seal
- screw the bushing which works as guide for the filter element (pilot bushing) on the thread around the hole at the bottom of the filter housing
- place the filter element around the bushing
- position **B2** plastic cover
- position **B1** spring on **B2** plastic cover
- reposition the O-ring seal in its housing
- reposition the lid and close it using the bolts

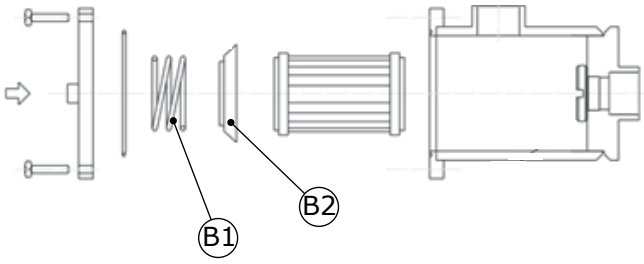

Fig. 13

PREPARATION OF FILTERS AND SYSTEM VACUUM

The refrigeration pack is delivered with the filters without interior elements. These, provided in hermetically-sealed containers, are packaged separately and in the necessary quantity to carry out the start-up and first replacement operations.

- Initially insert the deyhdrating filters provided with the machine in the suction filters of LOW and MEDIUM TEMPERATURE utilities (follow"ASSEMBLY NOTES FOR REMOTE SAFETY VALVES" and "ASSEMBLY OF MECHANICAL FILTER")
- close the circuit, connect the vacuum pump and evacuate the system and/or the sections involved to a residual pressure of 270Pa absolute (values are the same for both sides of high and low pressure). This vacuum must be maintained for at least 30 minutes and must be broken with dry nitrogen
- the system must be brought back to a minor vacuum of 270Pa absolute. This vacuum must be maintained for at least 6 hours and, afterwards, after verifying that the indicated pressure has been maintained, broken with the refrigerant of the system

The vacuum test MUST be carried out, if necessary or considered convenient, even on parts of the side of the system sectioned with taps (partial tests). The charge is terminated only when the utilities are in temperature.

To load the oil correctly into the system, refer to the following document:

- SE-TS050_120bar oil system management

MONITORING PRESSURE SWITCHES

The safety pressure switches of the system are distinguished by an external sticker showing the intervention pressure and the serial number. They are calibrated in the factory or provided already calibrated by the manufacturer, in that case they are marked with a dedicated label showing the calibration value and serial number. If they have not been calibrated there are no labels.

The pressure switches are reset automatically: once the intervention threshold has been reached, you must wait until the pressure drops to a level possible for them to be reset. For the reset pressure see the technical specifications of the pressure switch manufacturer. Each compressor is equipped with a pressure switch whose tripping pressure value is established on site by qualified personnel.

Before powering up the refrigeration pack it is recommended to carry out an electrical pre-inspection to verify the proper operation of the high and low pressure switches.

Check that the tamper-proof seals are intact.

It is forbidden to intervene on the calibration screws of the safety pressure switches.

The pressure switches are reset automatically due to the vast variations of pressure which interest the system working on R744 during its operation.

3.4 System start-up.

The specifications of the R744 refrigerant to use are shown in the table "Chart I".
The tools to use are:

- a pressure reducer equipped with a needle valve
- a full-scale pressure gauge 120bar and attachment from ¼ SAE to connect to the power pack

The pressure gauge monitors the pressure and the availability of refrigerant inside the can.

Before starting the system start-up phases, the correct connection of the electrical components and the correct fastening of screws and bolts should be checked.

FIRST REFRIGERANT CHARGE

Before starting to charge the system, supply the sump heaters with compressor oil, to bring the temperature of the oil to values close to 35/40°Cand power all the solenoid valves in the circuit and ensure correct charging also of the suction side.

Proceed with the following procedure:

- check that **all** the taps of the system are open
- power up the refrigeration pack
- break the vacuum by introducing the refrigerant R744 in gaseous phase with the can from the taps provided on the system (if present) or from the charge tap on the filter drier of the liquid line. The risk of dry ice formation ends when the pressure exceeds the value of 5,2bar in each part of the system
- charge the refrigerant in the gaseous phase to reach the value of V|12bar
- close the taps at the outlet of the liquid receiver
- power up only the LOW TEMPERATURE or the MEDIUM TEMPERATURE utilities, if the power pack does not provide for the powering up of the LOW TEMPERATURE utilities
- charge the fluid in the liquid phase on the corresponding line, using the system's service outlets or the line filter
- monitor the pressure of the system (suction, gas cooler and liquid receiver)
- monitor the level of liquid in the receiver
- having terminated the charge, **gently** reopen the liquid receiver outlet taps
- power up the MEDIUM TEMPERATURE utilities if the power pack also powers up the LOW TEMPERATURE utilities
- regulate the charge of refrigerant by monitoring the sight glass on the liquid receiver

Chart I

Purity	Moisture content	Can type
higher or equal to 99.9%	<250ppm (volume) or <102ppm (weight), at the conditions of -34°C/1bar	refrigerant fluid available in gaseous form at the valve, without float

LUBRICATION OF COMPRESSORS

The compressors for R744 refrigerant are delivered already with their own charge of oil in the sump which must be clear from the almost full indicator/sightglass

It is recommended to clean the filters upstream of the hot gas solenoid valve and downstream of the oil system after 3-4 days of operation from system start-up.

PUTTING INTO OPERATION

- set the calibration values of the MEDIUM and LOW TEMPERATURE utilities
- check the correct operation of the electronic expansion valves, of the temperature probes and pressure probes

Live open panel operations can only be carried out by qualified personnel and competent in the electrical sector.

it is forbidden for the qualified personnel to distance themselves from the refrigeration pack without first having activated the protection elements provided by the Manufacturer.

- supplement the initial charge of refrigerant by emitting more through the liquid line according to the ways previously shown and modulating the quantity of refrigerant emitted
- check the oil level in the reserve, separator, regulator of each compressor (control must occur with compressor off)
- the level of oil in the regulator must be at v|0 of the sight glass, while in the reserve and in the oil separator it must be maintained at the lower sight glass after two days of operation. If this does not occur proceed by supplementing the initial charge with the amount necessary to reach the indicated level

To load the oil correctly into the system, refer to the following document:

- SE-TS050_120bar oil system management

It is not necessary to add oil if the level has not dropped to below half of the lower indicator.

- after a first period of operation (approx. 12 hours) or when a significant increase in the loss of charge is noted through the suction filters stop the system
- isolate the filters and replace the filtering cartridges, introducing a mechanical filter cartridge into the suction filter and a solid filter dehydrating cartridge into the liquid filter, provided.
- evacuate affected pipe sections, then re-start the system
- check the oil again in the compressors and in the reserve: the level of oil in the reserve must never drop below the lower indicator

The reintegration of oil, distributed into the system until that moment, must be carried out after a first day of operation, to allow the oil to re-enter the reserve. Otherwise, if the upper indicator is clearly exceeded, it is essential to empty the excess of oil; this operation can be done through the lower valve.

It is recommended to clean the pipes of the system and replace the suction filters after 1 or 2 weeks from system start-up.

INSPECTION AND VERIFICATIONS ON SITE

- verify that the phase imbalance is lower than 3%
- check that the rotation of the gas cooler fans (remote) is correct (the fans must expel the air from the battery)

It is recommended to check all calibrations ("Chart II").

It is recommended to check and simulate all the safety interventions of pressure switches and delayers.

Chart II

Description Function of Pressure switch	Amount	Where it works	Symbol	Pressure [bar]	Temperature [°C]
Low pressure of LT utility	1	compressors	PLP-2	8	-43
Low pressure of MT utility	1	compressors	PLP-1	8	-43
LT Utilities Disconnection (optional)	1	utilities electric panel	PU-2	22	-15
High Compressor LT	1	compressors	PHP-C	40	6
MT Utilities Disconnection (optional)	1	utilities electric panel	PU-1	40	6
Activation RLV back-up (optional)	1	refrigeration pack backup	PUC	48	13.5
High Compressor MT	1	compressors	PHP-C	110	-
Activation of gas-cooler back-up	1	gas cooler fans	PSA	100	-

SECTION 2:
USER MANUAL

Doc. n° UM000xxx
Rev. "B" - 16/01/25

CONTENT

1. Introduction 3
2. Safety warnings 4
2.1 General warnings 4
2.2 Warnings for Maintenance of the refrigeration pack 5
2.3 Electrical warnings 5
2.4 Prohibitions 6
3. General description 7
3.1 Sections 10
4. Transport of refrigeration pack 11
5. Ambient conditions 12
6. Electrical connection 14
7. Technical features 15
8. User indications 16
8.1 Refrigerant fluid R744 in the transcritical regime cycle 16
8.2 Description of the refrigeration pack 16
8.3 Transport and handling 18
8.4 Receipt and storage 18
8.5 Installation and ambient conditions 19
8.6 Electrical connection 20
8.7 Technical features 21
8.8 Accessories and options 22
8.9 Maintenance and periodic checks 23
8.10 Emergency situations 26
8.11 Technical assistance 27
8.12 Dismantling and elimination 27
9. Supplementary general warnings 28
10. Reference directives and regulations 29

SYMBOLS USED

Prohibition symbol: it prohibits the carrying out of specific operations.

Attention symbol: accident prevention rules for the operator.

Warning symbol: possibility exists of causing damage to the refrigeration pack and/or its components.

Note symbol: it provides useful information.

1. INTRODUCTION

The contents of the Manual should be read carefully and kept with the refrigeration pack.
The manufacturer shall not be held liable for any harm caused to people or damage to property due to the failure to observe the warnings contained in this Manual.



Fig. 1

This Manual contains information considered necessary for the proper use and operation of the refrigeration pack.

Inside you will find the following descriptions and information:

- a functional description of the refrigeration pack and all its parts.
- information on the safety of the refrigeration pack and the accident prevention rules to follow
- a correct use of the refrigeration pack
- a correct ordinary and programmed maintenance, including cleaning operations

This Manual refers to the refrigeration pack in its different parts (divided and delivered with separate parcels):

- refrigeration
- electric (inclusive of electric panel)
- hydraulic (inclusive of additional modules)

Information not contained in this Manual:

- Installation instructions

For the correct installation of the refrigeration pack refer to the following documents:

- Quick Reference Instructions

This Manual is for the following professional figures:

- QUALIFIED OPERATOR person qualified, trained to operate, adjust, clean and carry out routine maintenance on the refrigeration pack
- SPECIALIST TECHNICIAN technician trained and authorized by the party indicated in the contract (manufacturer/ concessionaire/distributor) to carry out: installation, extraordinary maintenance, replacement and overhaul of refrigeration pack

Instructions for use are also available on: www.eptarefrigeration.com.

Refer to the declaration of conformity for the regulations and certificates of the refrigeration pack.

2. SAFETY WARNINGS

2.1 General warnings

The manufacturer shall not be held responsible for any harm caused to people or property due to the failure to observe the warnings contained in this manual. Any person who uses this refrigeration pack must read this user manual.

The employer must educate staff on the risks of accidents, on the devices arranged for staff safety, on the risks of noise emission and on the general safety rules provided for by the rules in force.

The refrigeration pack must be used by adults who have the necessary knowledge and whose physical, sensory or mental capabilities are not impaired; the refrigeration pack is not conceived for use by minors (in particular from 0 to 3 years of age). The children, in any case under the supervision of adults, must not play with the refrigeration pack.

Any other use not explicitly indicated in this manual is considered dangerous and the manufacturer cannot be held liable for any damage deriving from improper, wrong and unreasonable use.

The refrigeration pack must be used by personnel equipped with the appropriate personal protection equipment.

It is compulsory to use work gloves.

Do not leave the refrigeration pack without enclosure exposed to atmospheric agents.

Do not use direct or indirect jets of water on the refrigeration pack.

The removal of protection devices or panels that require the use of tools to be removed is reserved exclusively for qualified personnel.

For assembling dedicated optional accessories, contact your nearest authorised service centre.

Any work must be carried out exclusively by qualified personnel; in every case, the power supply must be disconnected from the refrigeration pack before any work is carried out.

Pay attention to the hot or moving parts marked with the appropriate symbol.

In case of fire, do not use water to put out the flames but only dry fire extinguishers

Do not damage the refrigeration circuit.

2.2 Warnings for Maintenance of the refrigeration pack

⚠ Maintenance work must only be carried out by authorised personnel.

⚠ Access to the electrical parts and/or parts that require the use of tools is reserved for specialist technicians.

⚠ Before any maintenance work is carried out, de-energize the electric panel.

⚠ Pay attention to the hot or moving parts marked with the appropriate symbol.

⚠ It is compulsory to use work gloves.

2.3 Electrical warnings

⚠ Ensure that the voltage corresponds to the data on the rating plate of the refrigeration pack.

⚠ The electrical installation must be carried out in a competent manner by specialised technicians.

⚠ The removal of the cover of the electrical panel is reserved for specialist technicians.

⚠ The refrigeration pack must be installed following the manufacturer's instructions, by professionally qualified personnel and complying with the electrical regulations for the specific Country.

⚠ Wrong installation of the refrigeration pack may cause injury and damage to people, animals or property, and the manufacturer shall not be held responsible thereof.

2.4 Prohibitions

It is forbidden to use the refrigeration pack for a purpose other than its installation in compression refrigeration circuits operating with refrigerants (for example, water or air pump or as device to dispose of refrigerants or other)

It is forbidden to install the refrigeration pack in systems other than those with compression refrigeration circuits operating with refrigerants

It is forbidden to use refrigerants, heat carriers or lubricants which are not allowed to operate the refrigeration pack.

It is forbidden for unskilled staff to remove the cover of the electrical panel or open panels that require the use of tools.

It is forbidden to place the refrigeration pack in closed environments and technical rooms in which there are gaseous explosive substances.

It is forbidden to remove the registration plate from the refrigeration pack.

It is forbidden to climb onto the refrigeration pack.

It is forbidden to replace components and/or modify the refrigeration pack outside the specifications provided for by the manufacturer, replace original spare parts with others not approved by the manufacturer, under the penalty of forfeiture of warranty conditions.

It is forbidden to modify the electric panel without the approval of the manufacturer.

Unauthorized personnel are prohibited from accessing the technical room where the refrigeration pack is installed and nearby areas.

3. GENERAL DESCRIPTION

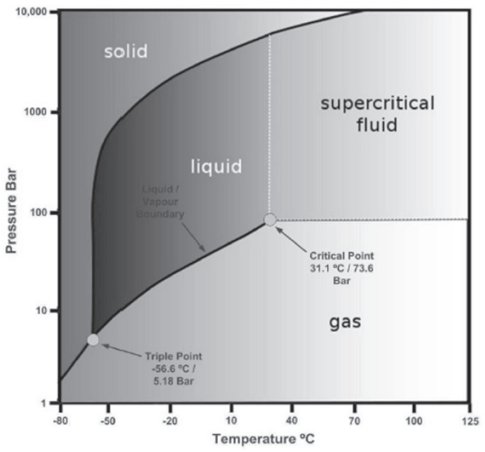

Fig. 2

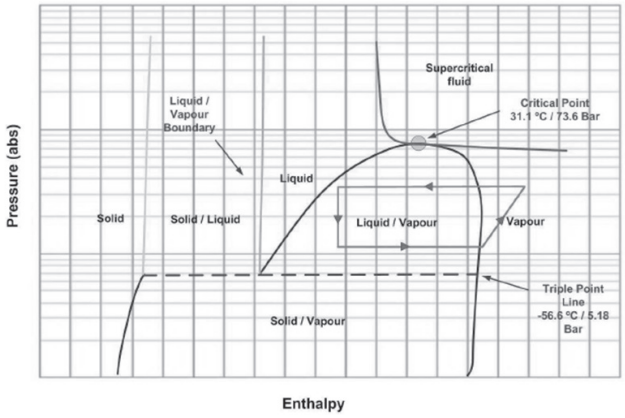

Fig. 3

Refrigerant	TRIPLE POINT		CRITICAL POINT	
[-]	Temperature	Pressure	Temperature	Pressure
	[°C]	[bar]	[°C]	[bar]
R744	-56.6	5.18	31.1	73.6

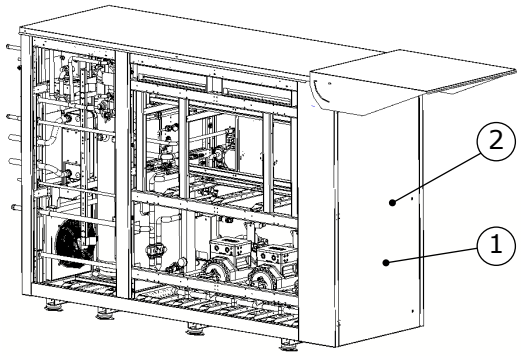

Fig. 4

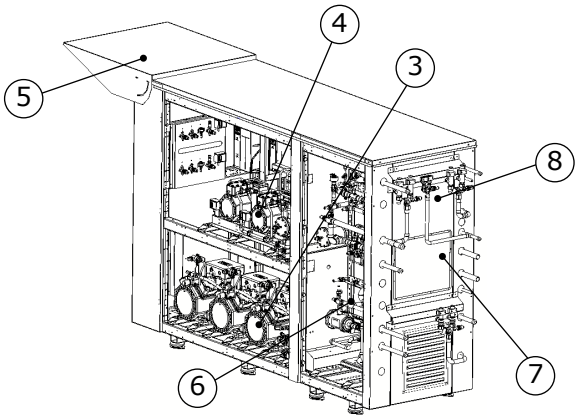

Fig. 5

1. Rating plate
2. Electric panel housing
3. MEDIUM TEMPERATURE compressors
4. LOW TEMPERATURE compressors
5. Rain roof (optional)
6. Liquid receiver
7. Liquid, intake, gas cooler return, heat recovery water, FTE connections
8. Safety valves

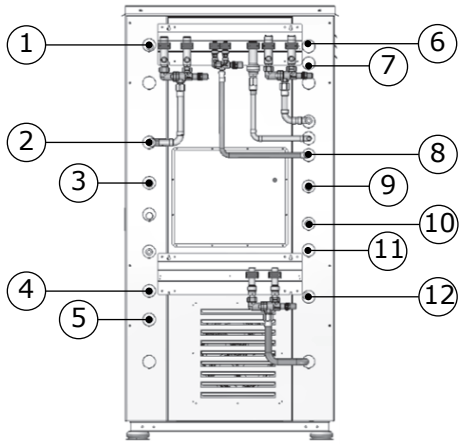

Fig. 6

1. Return inlet from gas cooler (1'' 1/8 K65)
2. Suction inlet from MEDIUM TEMPERATURE utility(1'' 3/8 K65 / 1'' 1/8 K65)
3. Flash gas towards FTE (1'' 1/8 K65)
4. Gas cooler outlet with heat recovery (1'' 1/8 K65)
5. Liquid line outlet (1'' 1/8 K65 / 7/8'' K65)
6. Suction line outlet under subcooler R134a (22mm Cu)
7. Liquid line inlet under subcooler |0 (16mm Cu)
8. Suction line inlet line from LOW TEMPERATURE utility(22x1,5mm Cu / 7/8'' K65)
9. Outlet H_20 (35mm Cu)
10. Inlet H_20 (35mm Cu)
11. Towards by-pass of the air desuperheater in the discharge line of the compressors LOW TEMPERATURE utility (5/8'' K65)
12. Gas cooler outlet without heat recovery (1'' 1/8 K65)

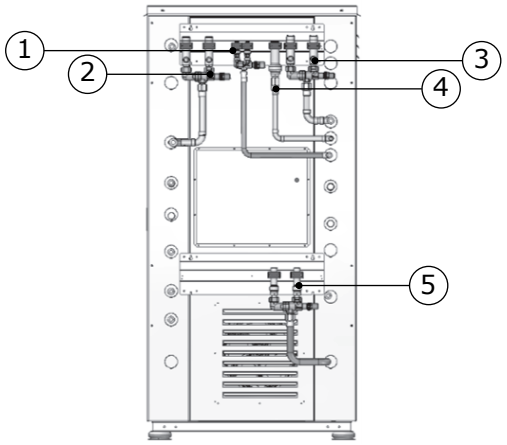

Fig. 7

1. MEDIUM TEMPERATURE utility suction, double with exchange tap
2. LOW TEMPERATURE utility suction, double with exchange tap
3. Liquid receiver, double with exchange tap
4. ETE module suction 100bar (optional)
5. High pressure 120bar, double with exchange tap

3.1 Sections

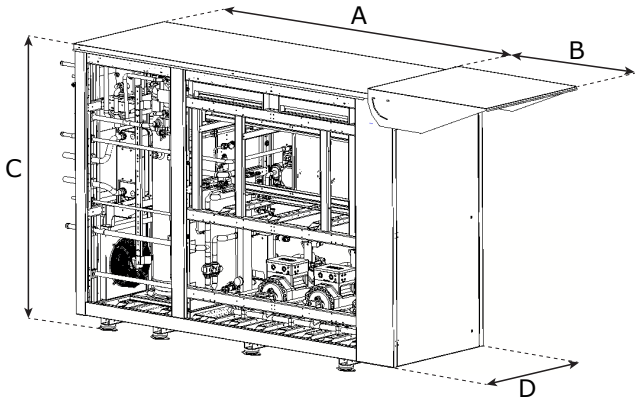

Fig. 8

Chart I

Version	Length A (mm)	Length B rain roof (mm)	Height C (mm)	Depth D (mm)
3 MT	3030	910	2080	1000
2 MT + 1 ETE	3030	910	2080	1000
3 MT + 2 LT	3030	910	2080	1000
2 MT + 2 LT + 1 ETE	3030	910	2080	1000

4. TRANSPORT OF REFRIGERATION PACK

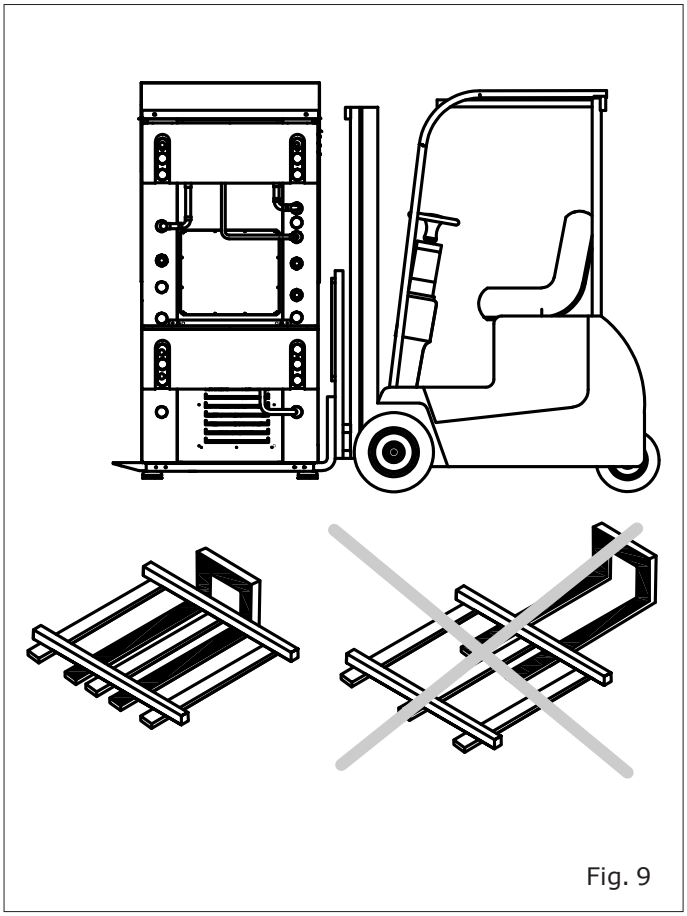

Fig. 9

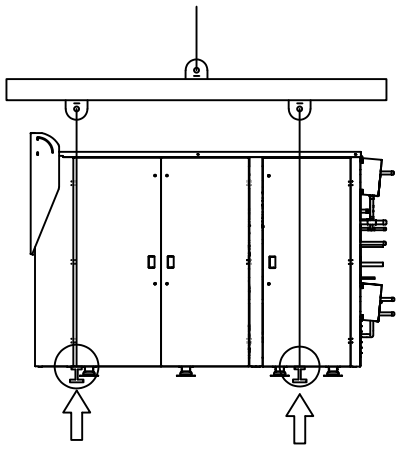

Fig. 10

Chart II

Version	Maximum net weight without enclosure (kg)	Maximum net weight with non-soundproofed enclosure (kg)	Maximum net weight with soundproofed enclosure (kg)
3 MT	2040	2300	2420
2 MT + 1 ETE	1990	2260	2370
3 MT + 2 LT	2190	2460	2570
2 MT + 2 LT + 1 ETE	2190	2460	2570

1. MT = compressor MEDIUM TEMPERATURE utility
2. LT = compressor LOW TEMPERATURE utility
3. ETE = compressor dedicated to the ETE configuration ("Extreme Temperature System")

5. AMBIENT CONDITIONS

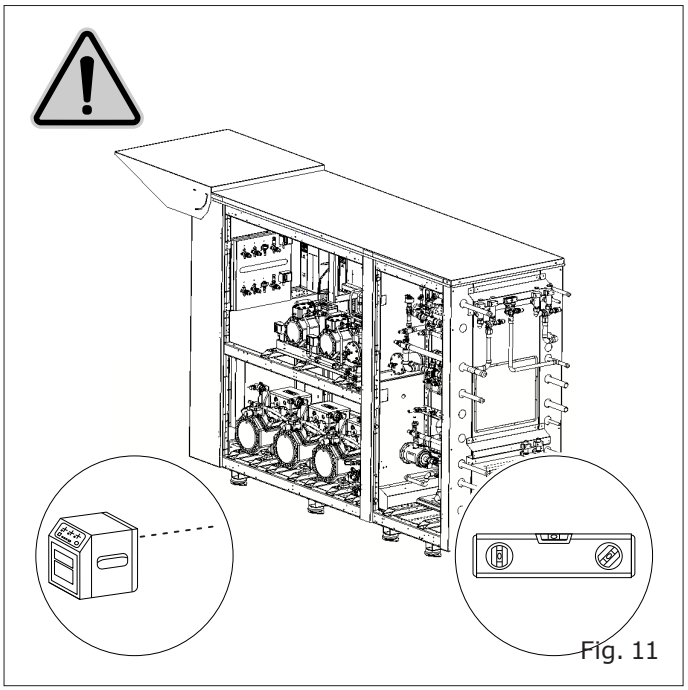

Fig. 11

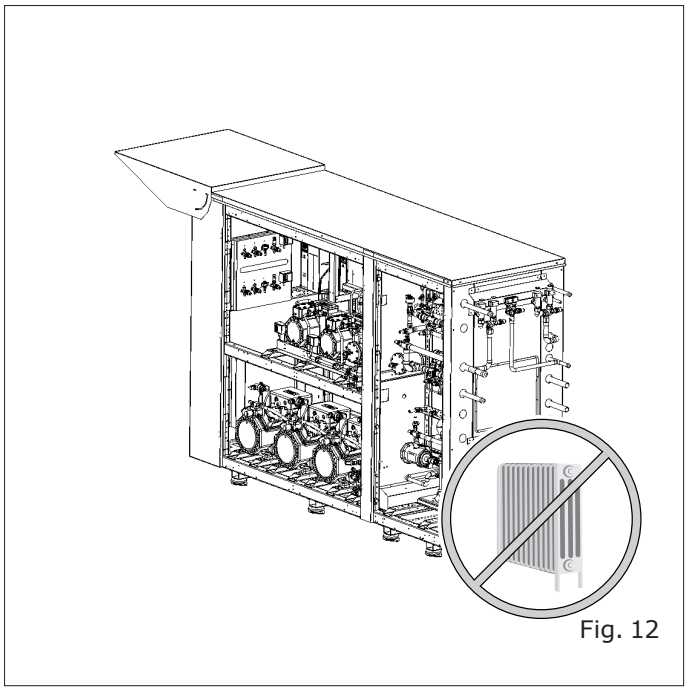

Fig. 12

Chart III

Characteristics	
Type of environment	Indoor / Outdoor
Temperature	<45°C
Soundproofed enclosure	Compulsory in case of outdoor environment

Version	Lp max without enclosure @10m (dB(A))	Lp max with soundproofed enclosure @10m (dB(A))
3 MT	58	53
2 MT + 1 ETE	57	51
3 MT + 2 LT	59	53
2 MT + 2 LT + 1 ETE	57	52

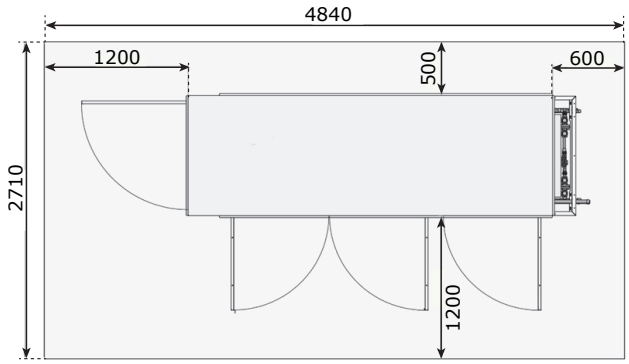

Fig. 13

Functional space for maintenance work

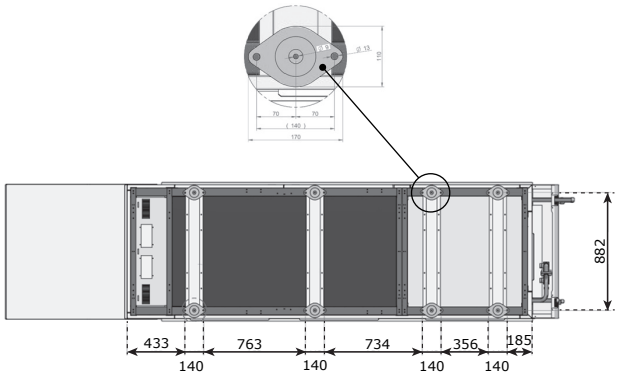

Fig. 14

6. ELECTRICAL CONNECTION

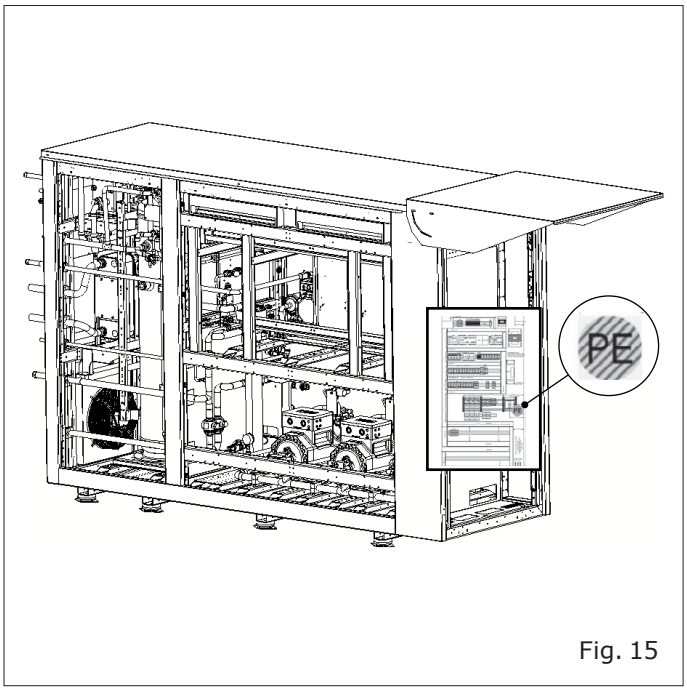

Fig. 15

7. TECHNICAL FEATURES

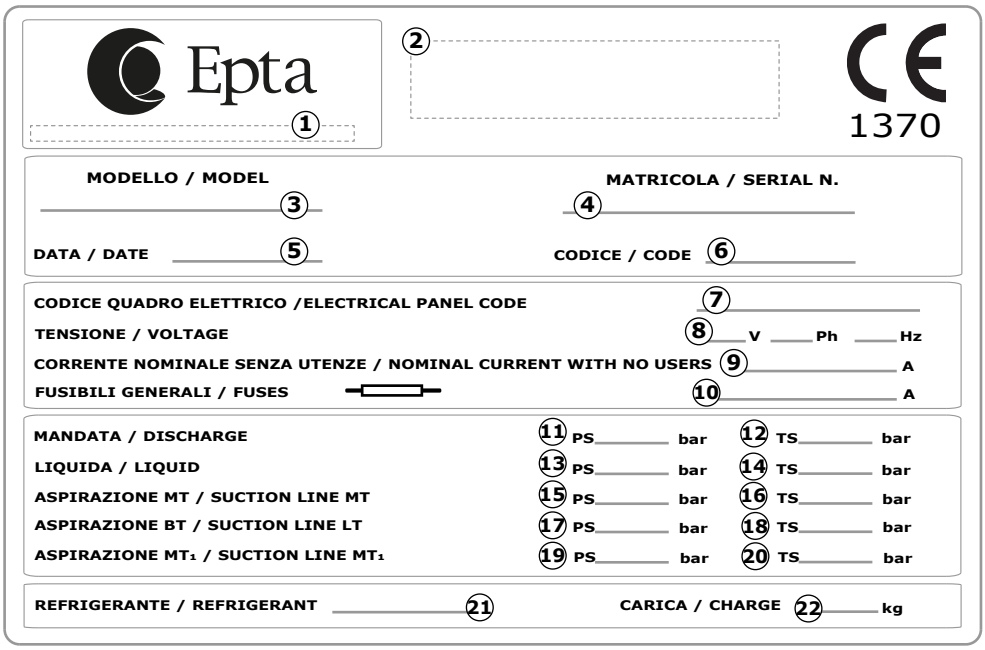

Fig. 16

1. Origin of the product
2. Barcode
3. Model
4. Serial number
5. Date of production
6. Hat Code
7. Code of electric panel
8. Rated voltage
9. Rated current without utility
10. Rated current general fuses
11. Maximum permissible pressure supply line
12. Maximum permissible temperature supply line
13. Maximum permissible pressure liquid line
14. Maximum permissible temperature liquid line
15. Maximum permissible pressure suction line MEDIUM TEMPERATURE utilities
16. Maximum permissible temperature suction line MEDIUM TEMPERATURE utilities
17. Maximum permissible pressure suction line LOW TEMPERATURE utilities
18. Maximum permissible temperature suction line LOW TEMPERATURE utilities
19. Maximum permissible pressure second suction line (ETE, AC, ...)
20. Maximum permissible temperature second suction line (ETE, AC, ...)
21. Type of refrigerant
22. Refrigerating mass (for pre-loaded refrigeration pack)

8. USER INDICATIONS

8.1 Refrigerant fluid R744 in the transcritical regime cycle

The basic refrigeration cycle on R744 is composed by four transformations: compression, condensation, lamination or expansion (inverse principle of compression, this transformation occurs in the electronic or thermostatic valve before the evaporator) and evaporation.
The transcritical cycle is called that way because the transformation of condensation occurs above the critical point. When this happens we can no longer call it condensation but gas-cooling.

Working above the critical point pressure and temperature are no longer unequivocally determined, this means that a given temperature may correspond to more pressures. In this case, the temperature at the gas-cooler outlet is measured through which it is possible to find the pressure which optimises system performance (operation carried out constantly by the controller).

The MEDIUM and LOW TEMPERATURE utilities are served by the same liquid receiver; the compressors of the LOW TEMPERATURE utility discharge in suction to those of the MEDIUM TEMPERATURE utility, with the consequent presence of a single gas cooler.

8.2 Description of the refrigeration pack

This line of refrigeration packs is suitable as a refrigeration unit to serve commercial refrigeration.
It uses refrigerant R744 and works in a transcritical and subcritical regime.

STRUCTURE base and supporting frame in lasertube profiles and bent galvanised sheet metal (united by high-strength structural rivets or bolts and screws), subsequently painted with epoxy-polyester powders in RAL7016 and RAL7035 and mounted on anti-vibration supports

ANTI-VIBRATION SUPPORTS with central rubber core, secured at the factory to dedicated housings created on the stringers of the machine

PIPES piping in Cu R220 with maximum permissible pressure of 30bar, in CuFe K65 with maximum permissible pressure of 120bar, in AISI 304L with maximum permissible pressure of 130bar ("Fig. 6")

INSULATION insulation with flexible insulating material in extruded and expanded elastomer (FEF) for all the components of the suction line and liquid line (19mm) and liquid receiver (32mm)

COMPRESSORS semi-hermetic with pistons, equipped with electrictal heating element on the crankcase

SPEED CONTROLLER for continuous regulation of speed and consequently of the refrigerant flow rate of compressors

SAFETY PRESSURE SWITCHES for each compressor of the MEDIUM and LOW TEMPERATURE utilities and for the ETE module compressor, according to the regulations in force in the specific Country

HOT GAS AND LIQUID INJECTION VALVE for the suction line of the MEDIUM TEMPERATURE and LOW TEMPERATURE utilities

TRANSCRITICAL VALVE (HPV) with external filter

FLASH GAS BY-PASS VALVE

LIQUID RECEIVER of 110L with maximum permissible pressure of 60bar, INTEGRATED into refrigeration pack

OIL SYSTEM IN HIGH PRESSURE inclusive of oil separator, reserve, safety valve and oil injection regulators for each compressor

SAFETY VALVES on each line, INTEGRATED into the refrigeration pack ("Fig. 7")

FILTERS on suction line to the MEDIUM and LOW TEMPERATURE utilities and on liquid line

ELECTRIC PANEL (INTEGRATED into refrigeration pack)

SWITCHON PACK SET-UP (INTEGRATED electrical connection into the refrigeration pack, equipped with supply controllers Carel and Danfoss)

SMART SYSTEM SET-UP (ICE)

GAS COOLER FANS BACK-UP manual electric circuit for operation of gas cooler fans at maximum speed

FIELD OF APPLICATION: medium-small commercial activities (discounts and supermarkets) with sales area from 1.000m^2 to 3.500m^2

FIELD OF USE:

- Utility **LOW TEMPERATURE** from 5,5kW to 23kW
with reference to the following conditions: $T_{evaporation}$=-32°C, $T_{condensation}$=-8°C

- Utility **MEDIUM TEMPERATURE** from 35kW to 106kW
with reference to the following conditions: $T_{evaporation}$=-8°C, $T_{gascooler}$=+40°C

MAXIMUM PERMISSIBLE PRESSURE
- Delivery 120bar
- Suction MEDIUM TEMPERATURE utility 45bar / 53bar / 60bar
- Suction LOW TEMPERATURE utility 30bar / 60bar
- Liquid line 45bar / 60bar
- Liquid receiver 60bar
- ETE module suction 100bar (optional)

The general characteristics and the dimensions are illustrated in the figures and in the sections contained in "General description" (from pg. "7" to pg. "9").

8.3 Transport and handling

The refrigeration pack is contained in a specific wrapping with handling chutes or pallets, according to the handling needs, and pressure-loaded with nitrogen.

Before starting the liftng operations, check that the refrigeration pack is balanced, stable and pressure-relieved

For the transportation and handling of the refrigeration pack use:

- A lift truck suited to lifting the referigeration pack with suitable characteristics compliant with the regulations in force ("Fig. 9")

Before starting the lifting operations, check that the chutes are firmly attached to the base of the refrigeration pack.

- A crane suited to lifting the refrigeration pack, with suitable characteristics compliant with the regulations in force ("Fig. 10")

Position the lifting bars at the points marked on the frame, using spacers which protect the refrigeration pack from damage to its structure.

Before moving the refrigerated pack, lift it enough to remove the chutes and complete the lifting.

Use a lifing beam to avoid damaging the electric panel, frame and enclosure (if present).

The weights of the refrigeration pack (without and with wrapping) and the dimensions of the packaging are shown in the tables "Chart I" and "Chart I".
The handling operations must be carried out by qualified staff able to assess weights, lifting points and most suitable means in terms of safety and capacity.

Do not make sudden movements or impacts that could compromise the integrity and functionality of the components of the refrigeration unit.

8.4 Receipt and storage

Check the conditions of the wrapping before taking delivery of the refrigeration pack from the carrier.
If there is obvious damage in the packaging:

- Remove the wrapping from the refrigeration pack in the presence of the carrier
- Sign the delivery document with reservation

The manufacturer shall not be held liable for any damage due to the transport or wrong storage of the refrigeration pack.

If the refrigeration pack is not equipped with an enclosure, the refrigeration pack must be kept away from the sun and bad weather.

The pack is delivered under pressure with nitrogen. Relieve the pressure before starting the handling phases.

8.5 Installation and ambient conditions

The pack is delivered under pressure with nitrogen. Discharge the pressure before starting the installation phases.

For a correct operation of the refrigeration pack, check that it is positioned:

- On a levelled floor ("Fig. 11").
- Away from heat sources and from risks of fire ("Fig. 12").

Choose the place of installation of the refrigeration plant to avoid, at any time, the condensation of humidity present in the air.

Respect functional spaces necessary for proper operation and adequate maintenance (Fig. 13).

After positioning it definitively, it is necessary to secure the refrigeration pack rigidly to the base using the securing holes on the anti-vibration plinths ("Fig. 14").

The ambient conditions in which to place the refrigeration pack are set out in · "Ambient conditions" · (table "Chart III").

INSTALLATION IN TECHNICAL ROOM

For installation in the technical room or machine room, dedicated openings on the perimeter walls or aeraulic devices must guarantee an airflow, to comply with the regulations in force, to avoid hazardous concentrations of refrigerant.
In particular:

- free passage of air from windows, grilles and air inlets or ducts must not be prevented by walls or barriers
- the ventilation hole must not vent towards openings of other rooms
- attention must be paid to density of refrigerant
- it must be possible to operate the fans from the outside and from the inside
- in the case of machine rooms installed below ground, the control switch from the outside of the special machine room must be positioned on the ground floor

If installed in a technical room, provide a detector for R744 concentration in the atmomsphere to provide alarm signal or the operation of appropriate air exchange systems.

The alarm of the R744 concentration detector must be positioned outside the technical room to prevent the entry of authorized personnel inside the room if the alarm is still on.

INSTALLATION OUTDOORS

For outdoor installation, the final location of the refrigeration pack must consider the need to:

- minimize the acoustic pollution produced (positioning the refrigeration pack as far as possible from populated areas and avoiding the possible sources of sound wave reflection)
- position the refrigeration pack away from flammable materials minimizing the risk of fire
- position the refrigeration pack away from sources of heat minimising the possibility of refrigerant discharge in the environment

8.6 Electrical connection

The electric panel of the refrigeration pack is designed for 380V-400V/3ph/50Hz power supplies.
To earth the refrigeration pack a connection point is provided formed by a screw with nut and a mark with symbol on ground ("Fig. 15"), as the equipotentiality of the metallic structure is guaranteed with a particular assembly system.
It must be powered with cable of adequate cross-section for the power of the unit and according to the installation site conditions.

It is necessary and essential to connect the refrigeration pack to the earthing system of the building.

The electric installation of the refrigeration pack must be carried out in accordance with existing regulations in force in the specific Country.

It is also necessary to verify:

- tightness to the terminal block of those electric cables which have no spring-loaded terminals (e.g. the motor power cables connected to the contactor), because during transport and handling the vibrations could have caused them to come loose
- the cabling of the electric panel, ensuring that the connection sleeves are not in contact with the pipes of the refrigerant or against the compressor and that in no way wear can occur following friction or contact with high temperature surfaces or the formation of condensation

The registration plate on the machine shows, among other data, the value of the maximum rated current (A). This value does not consider the fan consumption of any gas cooler.

ENTRY POINT OF POWER CABLES TO ELECTRIC PANEL

The entry point of the power cables must occur from the bottom using the plate positioned on the bottom of the electric panel (the plate is on the right and it is accessed by opening the electric panel). To maintain the protection level of the electric panel dedicated cable glands must be used.

During drilling for cable passage, prevent metal shavings entering the electric panel: DANGER OF SHORT CIRCUIT

All the components of the refrigeration pack must be protected from the possible penetration of water. Comply with the IP rating of the electric components in areas where water is in the immediate vicinity.

8.7 Technical features

The registration plate shows the technical data of the refrigeration pack. Its position and type of data are shown in "Technical features" ("Fig. 16").

8.8 Accessories and options

Enclosure
pannelling in hot-dip galvanised sheet metal and painted with epoxy-polyester powders in colour RAL7035, secured to the frame with rivets or screws; cover panel with "diamond" shape bending to avoid water stagnation

Rain roof
Electric panel front cover in sheet metal

Soundproof cover for enclosure
panel composed of a layer of polyester fibre (thickness 25mm and density 45kg/m^3) and rubber (thickness 4mm and surface mass 8kg/m^2)

FTEModule
additional liquid receiver
Available as REMOTE module (to install and connect on site) or INTEGRATED into refrigeration pack

ETE Module
subcooling module INTEGRATED into refrigeration pack
Components of the module: dedicated compressor with electronic expansion valve, plate heat exchanger, capacity controller and motorized valve

To avoid the risk of liquid entrapment in the pipeline, the factory setting of the minimum opening degree of the ETE module expansion valve must not be changed.

Air desuperheater electric panel for LOW TEMPERATURE utilities
by-pass system to insert the desuperheater in the discharge line of the compressors for LOW TEMPERATURE utilities
Components of the module: mechanical by-pass, electric panel to manage air desuperheater (REMOTE and provided separately by the Customer)

Heat recovery module
Plate exchanger to recover heat on the discharge temperature of the compressors for MEDIUM TEMPERATURE utilities, through a hydraulic circuit
The module is provided on board the refrigeration pack, with hydraulic and safety connections to carry out on site (provided by the Customer and in accordance with existing regulations in force in the specific Country)

Take all necessary measures to prevent the water in the plate exchanger from freezing.

Economiser
Plate exchanger positioned between the suction line of the MEDIUM TEMPERATURE utility and gas cooler return line

The economiser is not selectable in combination with ETE Module

Utility release pressure switch
Mechanical pressure switch to disconnect the utilities from the electric panel or in case of high pressure in suction

R744 backup unit
Auxiliary cooling unit: it turns on in case the system shuts down to keep the pressure of the liquid receiver constant.

Oil separatorbypass
Mechanical system to exclude the oil separator

Push-button
Electrically connected according to the wiring diagram

8.9 Maintenance and periodic checks

Constant monitoring of the machine's condition and correct maintenance are a guarantee of reliability and smooth operation of the entire system over time.
There is also a series of checks which authorized personnel can carry out periodically: simple visual checks on the condition of the key components of the pack.

Maintenance frequency

⚠ Maintenance work must only be carried out by authorised personnel.

AFTER 15 DAYS SINCE START carry out

- detect delivery pressure
- detect suction pressure
- measure supply voltage
- measure current intensity
- the replacement of the drier filters (mechanical filters on the suction line, solid filter on the liquid line)
- detect pressure difference between delivery (pressure gauge) and pressure at gas cooler read by the controller (Dp_{max}=0,8bar)

AFTER 1 MONTH SINCE START carry out

- replacement of oil separator filter
- monitoring the pressure difference between the inlet (pressure gauge) and outlet (pressure tap) of the oil separator

ONCE A MONTH carry out

- tighten electric contacts
- tighten fittings
- check compressor oil level
- check oil separator
- check oil reserve
- check liquid and humidity sight glass

EVERY SIX MONTHS carry out

- check suction filters

ONCE A YEAR carry out

- the check of all the filters and replacement of the one on the liquid line
- check the fastening of the screws and the electrical connections

⚠ If necessary, first interrupt the power supply to the cold pack to proceed with the intervention.

⚠ Pay attention to hot parts.

System maintenance

FILTER REPLACEMENT

An excessive loss of load through the suction filters is an indication that the micro-filtering mechanical cartridge is clogged due to residual impurities in the system.
The cartridges need to be replaced.

Before replacing the filters, it is necessary to intercept and unload the section of the refrigeration pack involved, as follows:

- turn off the tap upstream (supply of refrigerant) of the circuit to be sectioned
- wait 5-10 minutes to allow the refrigerant in the liquid state present in the circuit to evaporate due to the suction of the compressors
- turn off the tap downstream of the user too
- slowly open the discharge tap before intervening on the circuit

If the discharge tap is closed, the pressure which could be created by evaporation of small amounts of refrigerant (due to highering of the ambient temperature) is discharged by the safety valves connected to the sectioned circuit.

Before re-opening the taps, during refrigerant load, it is necessary to vacuum the circuit by connecting the pump to the drain tap.

REPLACEMENT OF SAFETY VALVE

It is recommended to replace the safety valve in case the latter has tripped: during discharge, the accumulation of residues of processing waste of components and pipes on the sealing element, may result in faulty seal in retro-closure; consequently, refrigerant could leak from the same during regular operation of the machine.

Before proceeding with the replacement of the manouver valve, check that the system is not under pressure or at a high temperature.

TOP UP OIL

Use only POE BSE85K oil.

For correct management of oil system refer to the following document:

- SE-TS050_120bar oil system management

During any oil top up, due to its strong hygroscopicity, it is necessary to limit the opening time of the circuit and of the oil containers to that strictly required to carry out the work.

SERVICE SAFETY - SERVICE VALVES

The maintenance of sections of the piping or components under pressure must be carried out in safety.

If the service valve is present it is usually installed on the pressure connection of the corner tap.
With this type of corner tap, when the latter is open, the pressure connection is isolated from the rest of the circuit. When the corner tap is closed, the pressure connection (and hence the service valve) is put into communication with the fluid.

The service valves are installed close to the circuit to be excluded and, considering the reduced presence of carbon dioxide in the section involved, can discharge into an internal area.
During operation, at the points in which the safety valves are installed, the corner tap must be open.

If there are no service valves present, the technician must connect a safety accessory or a pressure gauge to one of the two pressure connections. This allows to monitor the pressure to check that the refrigerant has been evacuated correctly.

Periodic checks on the refrigeration pack

For smooth operation of the refrigeration pack over time, we recommend the following periodic checks:

- structural integrity of the machine
- oxidised parts (any presence of rust must be removed: check origin and proceed, if necessary, to repair)
- leaks (strange oil stains on the floor, formation of condensation caused by damaged insulation, leaks through pipes, for example in the fittings of a water condenser, require immediate intervention by the authorized service centre)
- integrity of the power supply line (the connection cable of the refrigeration pack to the main power line must not be cut, cracked or present anomalies that compromise its insulation)



No differential for the refrigeration pack, after its installation, it must be assembled upstream of the power supply.

- correct tightening of the screws of the compressor delivery taps (refrigeration pack operating in transcritical regime)
- Presence and correct securing of pipe clamps
- Condition of filters

8.10 Emergency situations

An uncontrolled increase in pressure has occurred in the HIGH PRESSURE circuits:

- Check for failures of the control devices.
- Check that the secondary fluid in the condenser and in the gas cooler has not undergone a rise in temperature during operation of the compressors.
- Check that there is no prolonged shutdown of the compressors.
- Check that there is no insufficient flow rate or high temperature of the secondary fluid during operation of the compressors.
- Exclude the presence of a source of heat at the sides of the HIGH PRESSURE circuit.

An uncontrolled increase has occurred in the pressure of the LOW PRESSURE circuits:

- Check that there is no prolonged shutdown of the compressors.
- Exclude the presence of a source of heat at the sides of the LOW PRESSURE circuit.

A leakage of refrigerant under pressure has occurred:

- Check for any recent operation of the system valves.
- Check for any recent disassembly of system components.

Changes found to the setting values or exclusion of the control, command and safety electric circuits of the system:

- Check for recent work on the electric panels and on parts of the actuators by authorized personnel.

Refrigerant has leaked from the system and, at the same time, inhibition of safety valve of the HIGH PRESSUSRE circuit:

- Check for closure of the compressor delivery taps on the HIGH PRESSURE circuit and to the condenser/gas cooler by authorized personnel.

Refrigerant has leaked from the system and inhibition of safety devices:

- Check for a recent replacement of components on electric panels by authorized personnel.

Stress found in the piping and system joints:

- Check that following thermal dilation, the straight long sections have not been lengthened and contracted.
- Check that due to lack of anti-vibration supports on the refrigeration pack, the vibrations emitted from the latter give way to stress.
- Check that there has been no movement of system components.

A component of the system has failed:

- Check that HIGH or LOW TEMPERATURES have not weakened or reduced the strength of the materials of the system components.
- Check for any unusual vibrations.
- Check correct tightening of the screws and pipe clamps, which excludes the intervention of pressure switches of the MIDDLE TEMPERATURE utility compressors

A dangerous discharge of overpressure has occurred from the system:

- Check that the safety devices, if remote, are installed in the suitable position.
- check the piping is not obstructed by atmospheric agents and that the discharge occurs away from people or property.
- Check that the outflow of the safety valves is unrestricted and does not give rise to the formation of dry ice which can clog the drain.

Abrasion zones are created on the contact points between pipes and support points:

- Check that material of low hardness is placed between the pipes and support points.

If the preceding emergency situations do not depend on the listed reasons, contact your closest authorised service centre.

8.11 Technical assistance

If the intervention of technical assistance staff is required, contact the supplier where you purchased the refrigeration pack without delay. If you need to use spare parts always refer to the technical assistance service: ask and ensure that original spare parts are used.

8.12 Dismantling and elimination

In accordance with the regulations for waste disposal in force in the Specific Country and to respect the environment in which we live, the refrigeration pack or parts of it which are possibly decommissioned should be appropriately disposed of.
All the component parts of the refrigeration pack are not comparable to solid urban waste with the exception of metal parts which do not come under special waste for most European Countries.

The components of the refrigeration circuit must not be cut and/or separated before the circuit is discharged, with the recovery of refrigerant gas by qualified personnel.

The oil contained in the compressors must be appropriately recovered by qualified personnel.

9. SUPPLEMENTARY GENERAL WARNINGS

Instructions for correct installation and maintenance
The user and maintenance instructions are found in the User Manual available on the websites:
www.costan.com and www.bonnetneve.com.

The installation instructions dedicated to expert staff are available:

- From the service network
- In some categories of product in paper format delivered together with the product

Professional repair services
The services are provided by our service network which can be consulted in the contacts area at the website address www.eptarefrigeration.com.

Spare parts
The spare parts and the information for the repair of the appliance are available for at least 8 years after the product is declared out of production at the following web address: www.epta-service.com/service.
The log-in credentials are provided on request to send via mail to:
servicesupport@eptarefrigeration.com.

Ambient conditions
This appliance is intended to function in environments in which the temperature and humidity fall within the limits provided for in the User and maintenance manual.

Instructions for disassembly
For disassembly activities, it is necessary to contact the professional operators.
The Epta Group, which has always been driven by a special attention for the environment, makes available the dismantling and waste treatment manuals to users, downloadable below

The dismantling manual is available in the site:
www.eptarefrigeration.com.

Limits of application

⚠ This refrigeration pack is designed for use, transportation and storage up to a maximum altitude of 1000m above sea level.q

Storage:
- Temperature between -20°C and 45°C

Transport:
- Temperature between -20°C and 45°C

Installation:
- Temperature between 0°C and 45°C

Use:
- Temperature between 0°C and 45°C

The performance of the coldroom is not guaranteed outside its normal use.

For the correct management of the operating limits of the components installed on board the pack, refer to the documentation made available by the relevant suppliers.

10. REFERENCE DIRECTIVES AND REGULATIONS

EUROPEAN DIRECTIVE	EUROPEAN STANDARDS	UK DIRECTIVE	UK STANDARDS
Directive 2014/35/EU on the harmonisation of the laws of the Member States relating to the making available on the market of electrical equipment designed for use within certain voltage limits	EN 61439-1	Electrical Equipment (Safety) Low Voltage Regulations	BS EN IEC 61439-1
Directive 2014/30/EU on the harmonisation of the laws of the Member States relating to electromagnetic compatibility	EN 61000-6-1	EMC Regulations	BS EN IEC 61000-6-1
Directive 2013/35/EU on the minimum health and safety requirements regarding the exposure of workers to the risks arising from physical agents (electromagnetic fields)	-	The Control of Electromagnetic Fields	-
Directive 2014/68/EU on the harmonisation of the laws of the Member States relating to the making available on the market of pressure equipment	EN 14276-1	Pressure Equipment (Safety)	-
	EN 14276-2		-
Directive 2006/42/EC on machinery	EN 60204-1	Supply of Machinery (Safety)	BS EN 60204-1
	EN 378-1		BS EN 378-1
	EN 378-2		BS EN 378-2
	EN 378-3		BS EN 378-3
	EN 378-4 + A1		BS EN 378-4 + A1
	EN ISO 13849-1		BS EN ISO 13849-1
	EN ISO 13849-2		BS EN 12102
	EN ISO 4871		BS EN ISO 4871
	ISO 9614-3		BS EN ISO 9614-3
	EN 614-2		BS EN 614-2 + A1
	EN ISO 12100		-

EUROPEAN DIRECTIVE	EUROPEAN STANDARDS	UK DIRECTIVE	UK STANDARDS
Regulation (EU) 2024/590 on substances that deplete the ozone layer Regulation (EC) No 1005/2009 on substances that deplete the ozone layer	-	The Ozone-Deleting Substances and Fluorinated Gases (Amendment etc)	-
Regulation (EU) 2024/573 on fluorinated greenhouse gases	-	Fluorinated gas (F gas): guidance for users, producers and traders F-Gas on fluorinated greenhouse gases	-
Regulation (EU) 2023/66 amending Regulation (EU) 2021/821 of the European Parliament and of the Council as regards the list of dual-use items	-	The Trade in Torture etc. Goods (Amendment)	-
-	ISO 14040 – 14043	-	BS EN ISO 14040 + A1

The directives/regulations refer to the most recent year of publication

SECTION 3: QUICK REFERENCE INSTRUCTION

SERVICE AND MAINTENANCE

Doc. n° UM000xxx
Rev. "B" - 16/01/25

Modello - Modèle - Model Modell	**ECO2SMALL PLUS**	Epta TECHNICA
Fabbricante - Constructeur - Manufacturer Hersteller	**Epta Spa -** Via Mecenate, 86 - 20138 Milano (MI) ITALIA Tel. 02/55403211 Telefax 02/55401023	

Quick reference instruction

IT FR EN DE

CONTENT

1. Equipment required 3

2. Maintenance frequency 4

3. Periodic checks on the refrigeration pack 5

4. Maintenance 6

4.1 Replacement of filters 6
4.2 Replacement of safety valve 9
4.3 Oil top up 10
4.4 Service safety - service valves 10
4.5 Charging R744 refrigerant 11
4.6 Putting the system into operation 12
4.7 Complete system shutdown 12

SYMBOLS USED

Prohibition symbol: it prohibits the carrying out of specific operations.

Attention symbol: accident prevention rules for the operator.

Warning symbol: possibility exists of causing damage to the refrigeration pack and/or its components.

Note symbol: it provides useful information.

Personal protection equipment

	Safety shoes
	Protective gloves
	Safety glasses
	Safety helmet
	Safety vests

1. EQUIPMENT REQUIRED

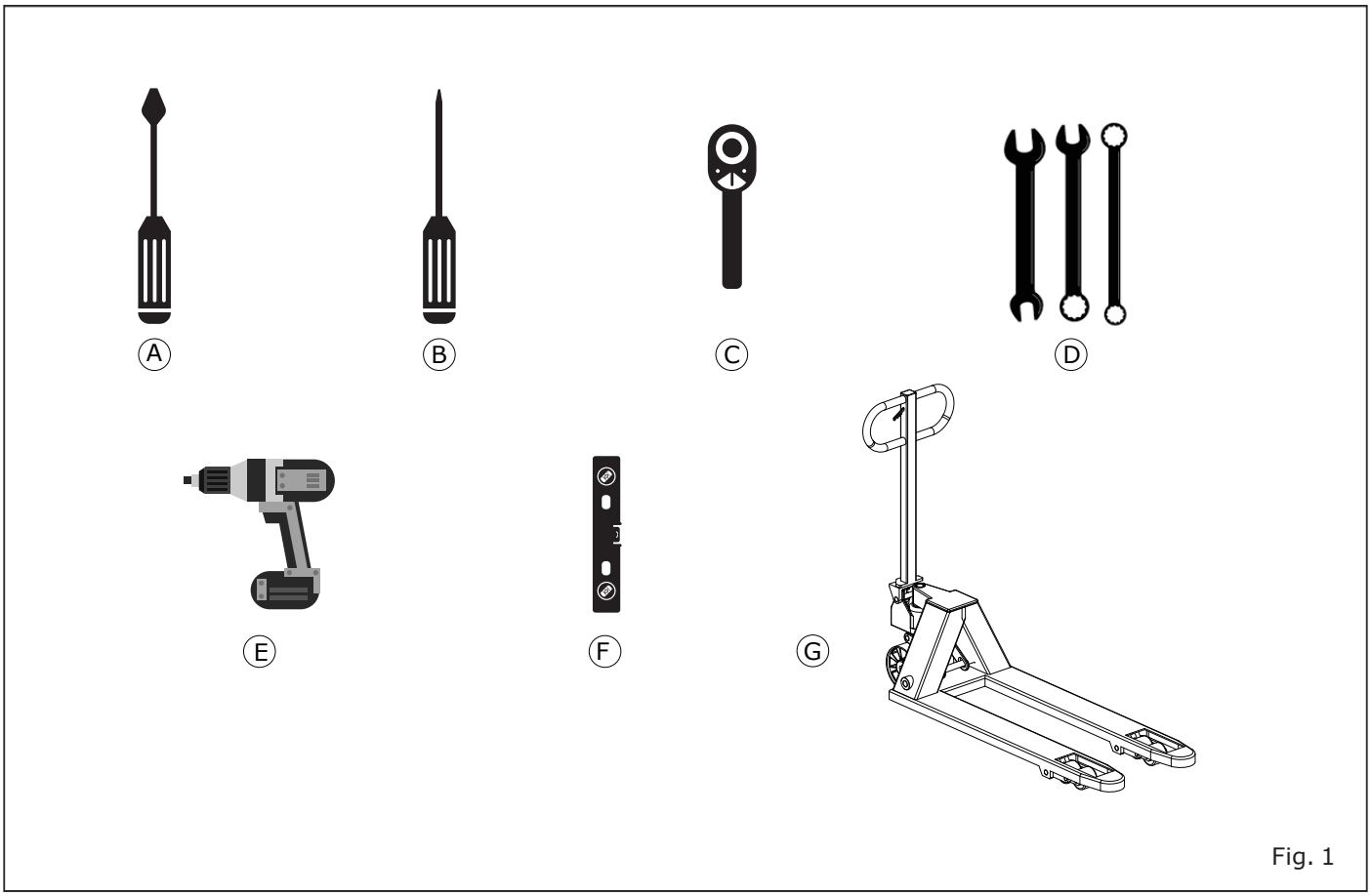

Fig. 1

A. Flat screwdriver
B. Star screwdriver
C. Ratchet wrench
D. Set of spanners
E. Electric screwdriver
F. Spirit level
G. Pallet truck

2. MAINTENANCE FREQUENCY

Constant monitoring of the machine's condition and correct maintenance are a guarantee of reliability and smooth operation of the entire system over time.
There is also a series of checks which authorized personnel can carry out periodically: simple visual checks on the condition of the key components of the pack.

⚠ Maintenance work must only be carried out by authorised personnel.

AFTER 15 DAYS SINCE START carry out

- detect delivery pressure
- detect suction pressure
- measure supply voltage
- measure current intensity
- the replacement of the drier filters (mechanical filters on the suction line, solid filter on the liquid line)
- detect pressure difference between delivery (pressure gauge) and pressure at gas cooler read by the controller (Dp_{max}=0,8bar)

AFTER 1 MONTH SINCE START carry out

- replacement of oil separator filter
- monitoring the pressure difference between the inlet (pressure gauge) and outlet (pressure tap) of the oil separator

ONCE A MONTH carry out

- tighten electric contacts
- tighten fittings
- check compressor oil level
- check oil separator
- check oil reserve
- check liquid and humidity sight glass

EVERY SIX MONTHS carry out

- check suction filters

ONCE A YEAR carry out

- the check of all the filters and replacement of the one on the liquid line
- check the fastening of the screws and the electrical connections

⚠ If necessary, first interrupt the power supply to the cold pack to proceed with the intervention.

⚠ Pay attention to hot parts.

3. PERIODIC CHECKS ON THE REFRIGERATION PACK

For smooth operation of the refrigeration pack over time, we recommend the following periodic checks:

- structural integrity of the machine
- oxidised parts (any presence of rust must be removed: check origin and proceed, if necessary, to repair)
- leaks (strange oil stains on the floor, formation of condensation caused by damaged insulation, leaks through pipes, for example in the fittings of a water condenser, require immediate intervention by the authorized service centre)
- integrity of the power supply line (the connection cable of the refrigeration pack to the main power line must not be cut, cracked or present anomalies that compromise its insulation)
- correct tightening of the screws of the compressor delivery taps (refrigeration pack operating in transcritical regime)
- Presence and correct securing of pipe clamps
- Condition of filters

⚠ No differential for the refrigeration pack, after its installation, it must be assembled upstream of the power supply.

4. MAINTENANCE

4.1 Replacement of filters

The refrigeration pack is turned on with solid filters on the suction line of the LOW and MEDIUM TEMPERATURE utilities and on the liquid line. After 15 days that the system has been started-up, it is necessary to replace **all** the filters on these lines:

- filters on the suction line with mechanical filter
- filter on the liquid line with solid filter

Filter operation must be checked yearly.
An excessive loss of load through the suction filters is an indication that the micro-filtering mechanical cartridge is clogged due to residual impurities in the system.
The cartridges need to be replaced.

On request, the filter cartridge kit (containing the replacement filters) can be shipped together with the refrigeration pack.

To work safely during the replacement of the filters, it is necessary to monitor the pressure values of the liquid receiver, gas cooler and suction lines, using tools suitable for this purpose and certified.

It is also very important to check the rubber collar on the flange: if it has deteriorated, it must be replaced.
The package of the replacement filter contains gaskets for flanges of different sizes.
Wet the new piece with a little oil before closing it up again.

FILTER REPLACEMENT ON THE LIQUID LINE

The filter is equipped with a bypass tap line **A**, so it is not necessary to stop the system during its replacement.

- if present, activate the emergency motor-condensing unit **Backup Unit R744** (optional) by lowering the pressure value on the mechanical pressure switch
- close the **B** tap upstream of the filter
- wait 5-10 minutes to allow the refrigerant in the liquid state present in the circuit to evaporate due to the suction of the compressors
- close the **C** tap downstream of the filter too
- open the **A** by-pass tap so the utilities continue to be powered up
- to eliminate liquid in the section between **B** and **C**, connect the filter of the liquid line with that of the suction line of the LOW TEMPERATURE utility using a flexible pipe with a maximum pressure suitable for reaching the level of pressure of the suction line of the same LOW TEMPERATURE utility
- using a specific pressure guage check the pressure inside the filter, ensuring that its value reaches 0bar
- detach the pipe from the suction line filter of the LOW TEMPERATURE utility and release the pressure directly into the atmosphere.

- loosen and remove the bolts of the filter housing, the lid and O-ring seal
- screw **A3** metal sleeve onto **A2** plastic cover
- position the filter element on **A3** metal sleeve
- screw **A3** metal sleeve on the thread around the hole at the bottom of the filter housing
- position **A1** spring on **A2** plastic cover
- reposition the O-ring seal in its housing
- reposition the lid and close it using the bolts
- create the vacuum in the section of circuit involved and pressurize it with refrigerant at a pressure greater than 8bar
- re-open the **B** taps upstream and **C** taps downstream of the filter
- close the **A** bypass tap
- restore the pressure value on the mechanical pressure switch (38bar) necessary to activate the emergency motor-condensing unit **Back up unit R744** (optional)

During the closing phases of the **B** taps upstream and **C** taps downstream of the filter, pay attention to the possible opening of the safety valves installed directly on the taps.

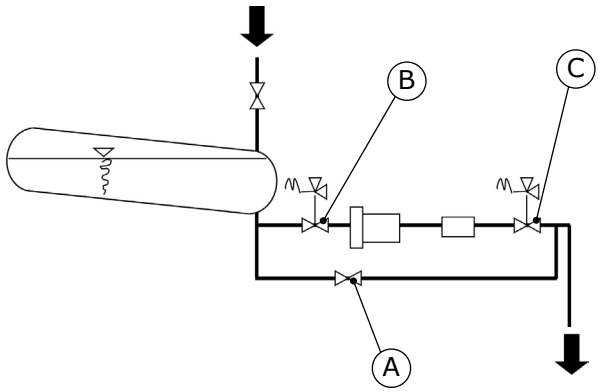

Fig. 2

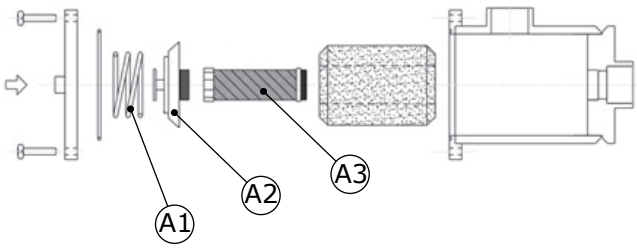

Fig. 3

FILTER REPLACEMENT ON SUCTION LINE

The filters are not provided with a bypass tap line so it is necessary to stop the system.

- if present, activate the emergency motor-condensing unit **Backup Unit R744** (optional) by lowering the pressure value on the mechanical pressure switch
- turn off the utilities and wait for the compressors to stop!

The pressure should always be monitored using a pressure gauge located on the delivery manifold.

It is recommended to check that the liquid receiver and suction pressures are stable throughout the procedure.

- close the tap upstream of the transcritical valve to isolate the high pressure section
- position the selector switch of the compressors on the panel to **OFF**
- close the suction taps of each compressor and that which excludes the flash gas valve
- close the taps upstream of the filter and that which excludes the flash gas valve
- drain the refrigerant into the atmosphere, checking the pressure inside the filter with the specific pressure gauge
- open the filter for replacement only when the pressure reaches a value of 0bar
- loosen and remove the bolts of the filter housing, the lid and O-ring seal
- screw the bushing which works as guide for the filter element (pilot bushing) on the thread around the hole at the bottom of the filter housing
- place the filter element around the bushing
- position **B2** plastic cover
- position **B1** spring on **B2** plastic cover
- reposition the O-ring seal in its housing
- reposition the lid and close it using the bolts

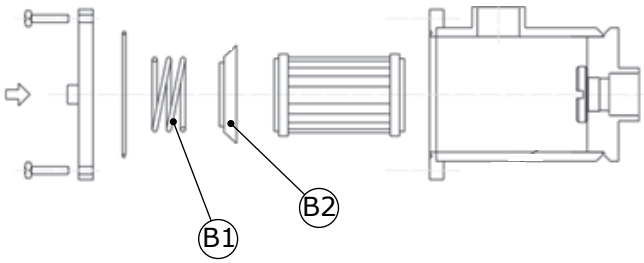

Fig. 4

- create the vacuum in the section of circuit involved and pressurize it with refrigerant at a pressure greater than 8bar
- close the gauge outlet
- re-open the taps upstream and downstream of the filters
- re-open the tap upstream of the transcritical valve
- re-activate the compressors
- turn the utilities for the units back on, with each unit not exceeding 30% of the total capacity
- restore the pressure value on the mechanical pressure switch (38bar) necessary to activate the emergency motor-condensing unit **Back up unit R744** (optional)

The suction filter of the LOW TEMPERATURE utility can be replaced even without turning off the refrigeration pack: it is sufficient to turn off the LOW TEMPERATURE utility and wait for the compressors to stop.

4.2 Replacement of safety valve

Check for any openings of the safety valves in the various circuits (the caps on the valves must always be mounted). If there is no cap, the valve has intervened and must be replaced.

It is recommended to replace the safety valve in case the latter has tripped: during discharge, the accumulation of residues of processing waste of components and pipes on the sealing element, may result in faulty seal in retro-closure; consequently, refrigerant could leak from the same during regular operation of the machine.

Before proceeding with the replacement of the manouver valve, check that the system is not under pressure or at a high temperature.

When the valves are parallel they must not both be in communication. The tap must be **completely closed or completely open**, so that only one valve vents and, awaiting replacement, the other works by switching the tap. It is important to check that the taps have not been left halfway.

4.3 Oil top up

Use only POE BSE85K oil.

For correct management of oil system refer to the following document:

- SE-TS050_120bar oil system management

During any oil top up, due to its strong hygroscopicity, it is necessary to limit the opening time of the circuit and of the oil containers to that strictly required to carry out the work.

The oil that remains in the tin cannot be re-used for further top ups at different times (ester oil is highly hygroscopic). To top up it is recommended to use tins of1kg

The oil contained in the compressors must be appropriately recovered by qualified personnel.

4.4 Service safety - service valves

The maintenance of sections of the piping or components under pressure must be carried out in safety.

If the service valve is present it is usually installed on the pressure connection of the corner tap.
With this type of corner tap, when the latter is open, the pressure connection is isolated from the rest of the circuit. When the corner tap is closed, the pressure connection (and hence the service valve) is put into communication with the fluid.

The service valves are installed close to the circuit to be excluded and, considering the reduced presence of carbon dioxide in the section involved, can discharge into an internal area.
During operation, at the points in which the safety valves are installed, the corner tap must be open.

If there are no service valves present, the technician must connect a safety accessory or a pressure gauge to one of the two pressure connections. This allows to monitor the pressure to check that the refrigerant has been evacuated correctly.

4.5 Charging R744 refrigerant

The specifications of the R744 refrigerant to use are shown in the table "Chart I".
The tools to use are:

- a pressure reducer equipped with a needle valve
- a full-scale pressure gauge 120bar and attachment from ¼ SAE to connect to the power pack

The pressure gauge monitors the pressure and the availability of refrigerant inside the can.

Before starting to charge the system, supply the sump heaters with compressor oil, to bring the temperature of the oil to values close to 35/40°Cand power all the solenoid valves in the circuit and ensure correct charging also of the suction side.

⚠ It is recommended not to overcharge the system and consider its inertia.

Proceed with the following procedure:

- check that **all** the taps of the system are open
- power up the refrigeration pack
- break the vacuum by introducing the refrigerant R744 in gaseous phase with the can from the taps provided on the system (if present) or from the charge tap on the filter drier of the liquid line. The risk of dry ice formation ends when the pressure exceeds the value of 5,2bar in each part of the system
- charge the refrigerant in the gaseous phase to reach the value of V|12bar
- close the taps at the outlet of the liquid receiver
- power up only the LOW TEMPERATURE or the MEDIUM TEMPERATURE utilities, if the power pack does not provide for the powering up of the LOW TEMPERATURE utilities
- charge the fluid in the liquid phase on the corresponding line, using the system's service outlets or the line filter
- monitor the pressure of the system (suction, gas cooler and liquid receiver)
- monitor the level of liquid in the receiver
- having terminated the charge, **gently** reopen the liquid receiver outlet taps
- power up the MEDIUM TEMPERATURE utilities if the power pack also powers up the LOW TEMPERATURE utilities
- regulate the charge of refrigerant by monitoring the sight glass on the liquid receiver

Chart I

Purity	Moisture content	Can type
higher or equal to 99.9%	<250ppm (volume) or <102ppm (weight), at the conditions of -34°C/1bar	refrigerant fluid available in gaseous form at the valve, without float

4.6 Putting the system into operation

- insert one compressor at a time, starting with the compressors of the MEDIUM TEMPERATURE utilities, and slowly opening the suction tap until fully open
- activate the utilities a little at a time, depending on the available refrigeration charge (number of compressors in operation)
- supply the refrigerant in the gaseous phase from the charging port mounted on the suction filter
- check the refrigerant charge by means of the passage indicator placed downstream of the filter drier on the liquid line (close to the charge tap)
- after having set the calibration values of the utilities and controlled the correct operation of the electronic expansion valves, ensure that the standby times of each compressor are not too long (set minimum operating times for each compressor of at least 5 minutes and limit the number of starts to a maximum of 8 each hour to avoid expulsion of oil)
- check the level of oil in the sump
- check the temperatures of the drain pipes (must be greater than 40°C), of the oil (it must be higher than 20°C) and of the suction pipe (must result in overheating greater than 10K)

4.7 Complete system shutdown

If the refrigeration pack shutdowns completely (following, for example, a power failure) the refrigerant pressure in the circuits increases.

To keep the liquid receiver pressure constant, the refrigeration pack can be equipped with an emergency motor-condensing unit **Backup unit R744** (optional) which is activated when the mechanical pressure switch mounted on the liquid line reaches the disconnect pressure.

If the emergency motor-condensing unit is not present, the safety valves are activated if the limit pressure is exceeded.

SECTION 4:
DATASHEET

Doc. n° UM000xxx
Rev. "B" - 16/01/25



Epta
Advanced Solutions
for your Store