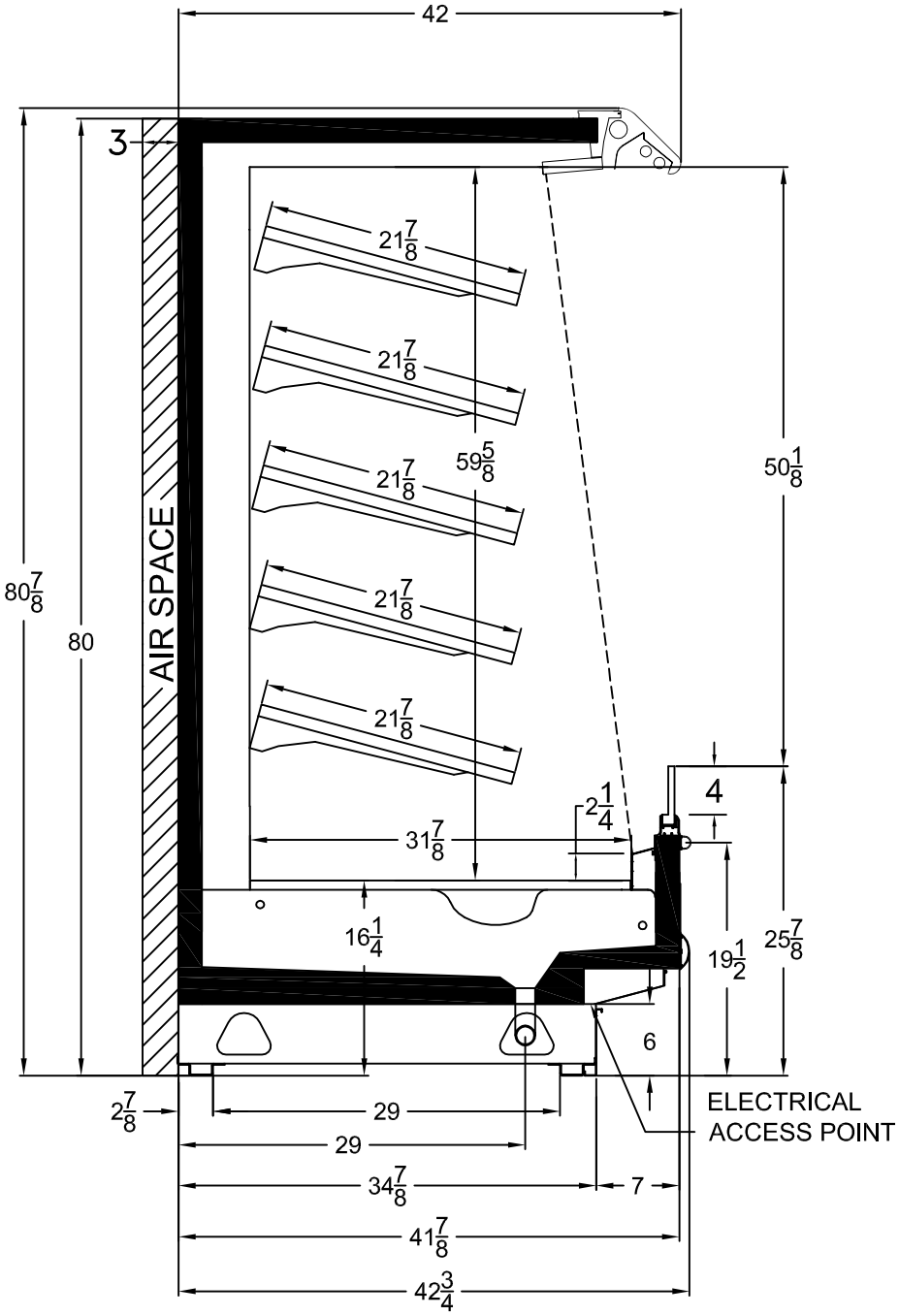
42
3
AIR SPACE
$21\frac{7}{8}$
$21\frac{7}{8}$
$21\frac{7}{8}$
$21\frac{7}{8}$
$21\frac{7}{8}$
$59\frac{5}{8}$
$50\frac{1}{8}$
$80\frac{7}{8}$
80
4
$2\frac{1}{4}$
$31\frac{7}{8}$
$16\frac{1}{4}$
$19\frac{1}{2}$
$25\frac{7}{8}$
6
$2\frac{7}{8}$
29
29
$34\frac{7}{8}$
7
$41\frac{7}{8}$
$42\frac{3}{4}$
ELECTRICAL
ACCESS POINT

MX6XP